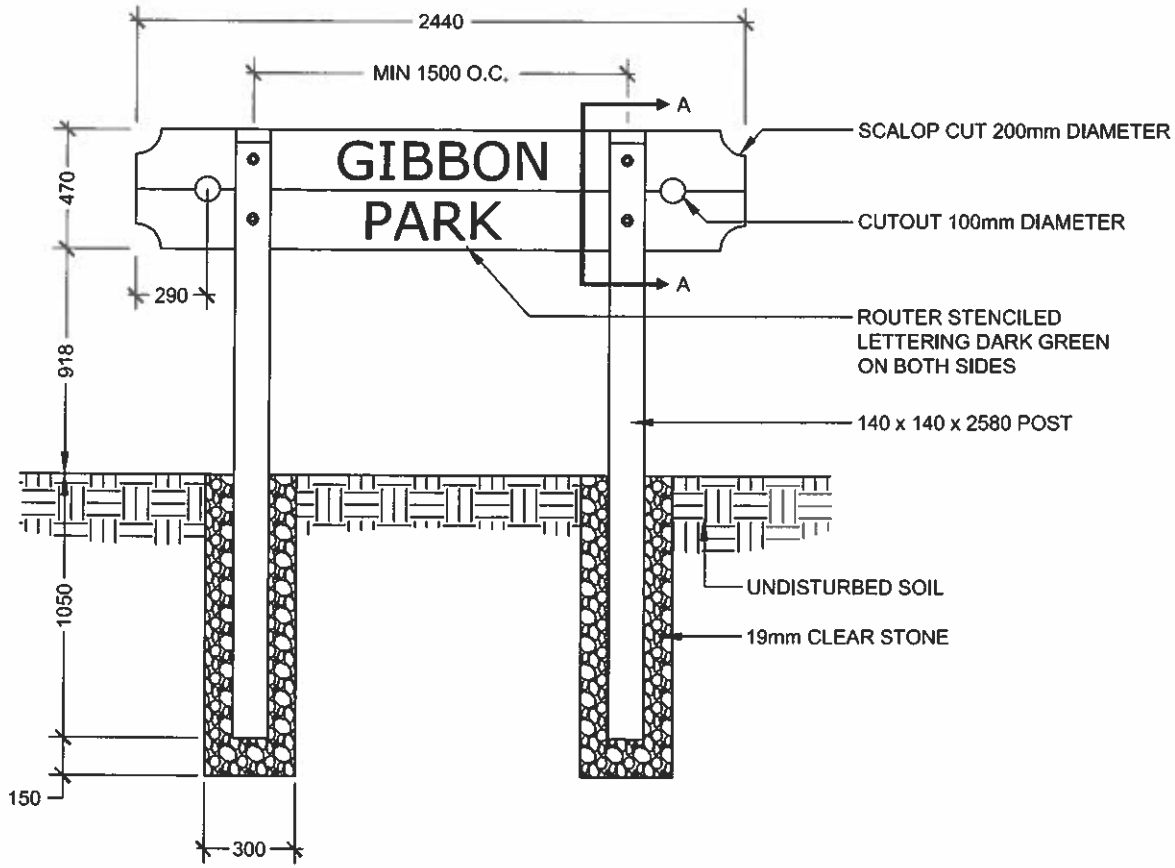

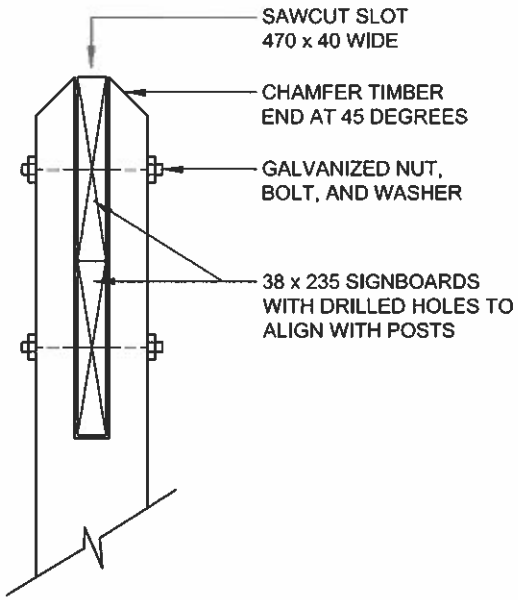

SECTION A-A

1. ALL LUMBER TO BE PRETREATED WITH AN APPROVED BROWN, MICRONIZED COPPER WOOD PRESERVATIVE OR APPROVED EQUIVALENT.
2. ALL HARDWARE TO BE HOT DIPPED GALVANIZED.
3. MOUNT ASSEMBLED SIGN AT APPROVED LOCATION LEVEL AND PLUMB.
4. ALL DIMENSIONS ARE IN MILLIMETRES.

The City of BARRIE STANDARD DETAIL	STANDARD PARK SIGN	REV No. 1	DATE: JUNE 2015
			SCALE: N.T.S.
		BSD-1300 FORMERLY BSD-32	APPROVED DATE June 11/15 DIRECTOR OF ENGINEERING