103 NAPIER STREET/95 COOK STREET, BARRIE, ON

MUNICIPAL FILE: D28-050-2021

LANDMARK ENVIRONMENTAL GROUP LTD.

PROJECT NO. LA 602-21

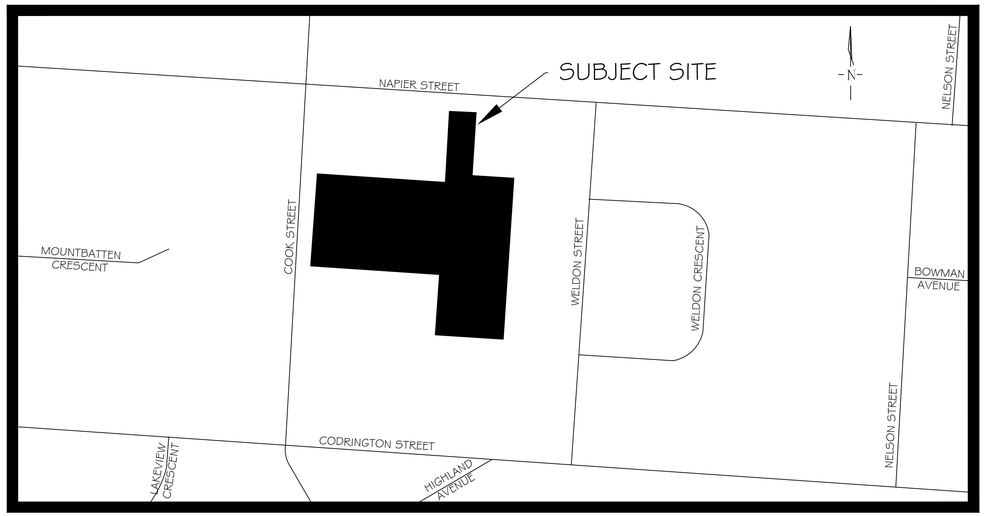

KEY PLAN N.T.S.

DRAWING LIST:

EX-1: EXISTING CONDITIONS
TP-1: TREE PRESERVATION PLAN 1
TP-2: TREE PRESERVATION PLAN 2
L-1(A): LANDSCAPE CONCEPT PLAN C/W AERIAL
L-1: LANDSCAPE CONCEPT PLAN
LD-1: DETAILS 1
LD-2: DETAILS 2
LD-3: DETAILS 3
LD-4: DETAILS 4

CLIENT:

MK & COMPANY
103 NAPIER STREET/95 COOK STREET, BARRIE

MUNICIPALITY:

CITY OF BARRIE
70 COLLIER STREET, P.O. BOX 400,
BARRIE, ON
L4M 4T5

LANDSCAPE ARCHITECT:

LANDMARK ENVIRONMENTAL GROUP LTD
Landscape Architects
Consulting Arborists
Urban Forestry

LANDSCAPE ARCHITECTS
& CONSULTING ARBORISTS
OFFICE: 705-796-1122
info@LEGroupLtd.com
www.LEGroupLtd.com

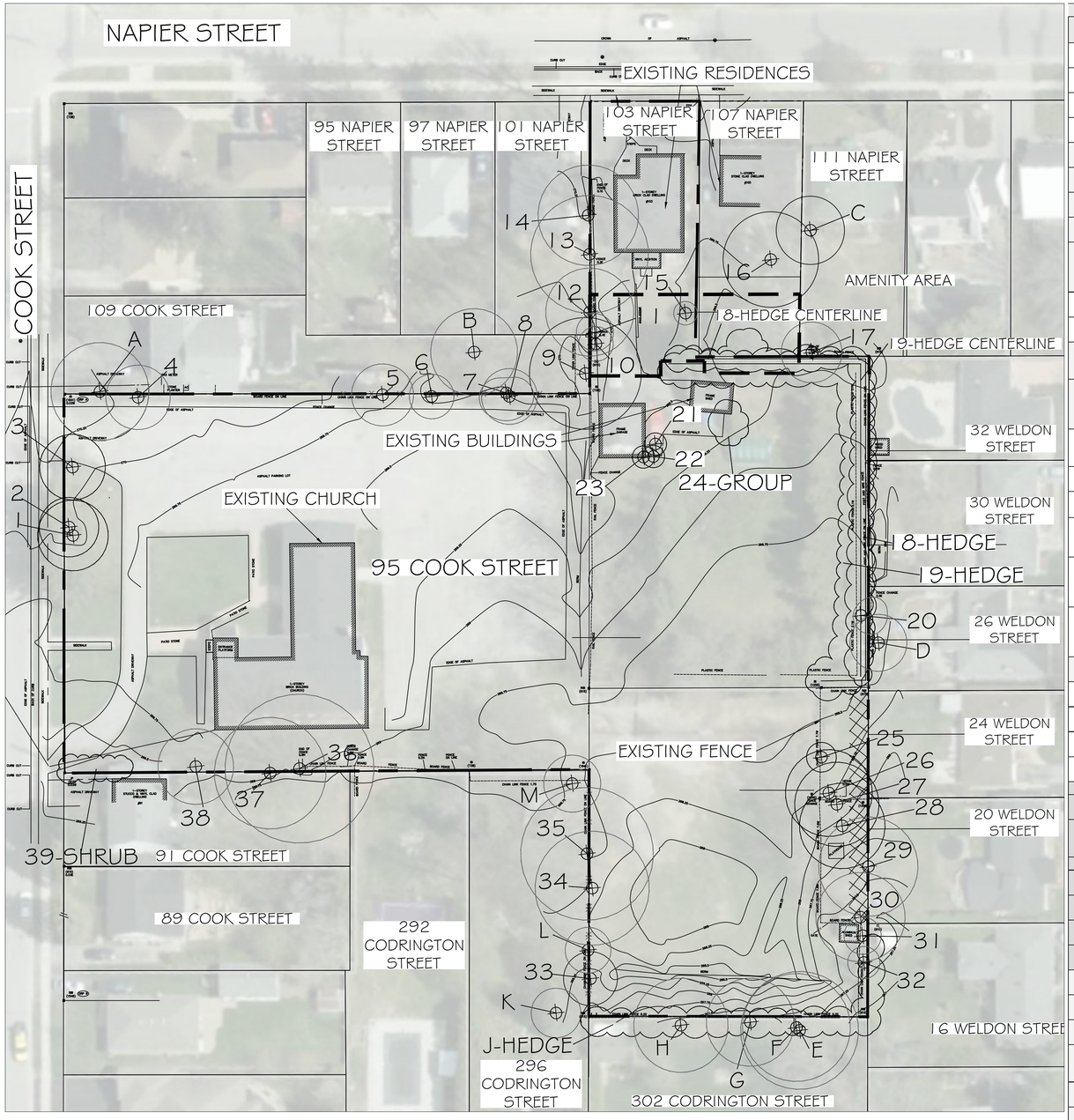

NOTE:
VEGETATION CLEARING IS TO BE AVOIDED FROM APRIL 1 TO AUGUST 31 TO AVOID IMPACTS TO BIRDS PROTECTED UNDER THE MIGRATORY BIRDS CONVENTION ACT. IF CLEARING MUST PROCEED WITHIN THIS WINDOW, THE AFFECTED AREA MUST BE SCREENED BY A QUALIFIED ECOLOGIST BEFORE 48HRS OF CLEARING ACTIVITIES.

NOTE:
IN ACCORDANCE WITH THE ARBOR REPORT, IT IS RECOMMENDED THAT THE OWNER OBTAIN A CONSENT TO HARM AGREEMENT FOR TREE NOS. 5-9 & TREE A & B FROM THE PROPERTY OWNER OF 109 COOK STREET, TREE NO. 20 & TREE D FROM THE PROPERTY OWNER OF 26 WELDON STREET, J-HEDGE FROM PROPERTY OWNERS 16 WELDON STREET AND 302 CODRINGTON STREET, TREE E-H FROM 302 CODRINGTON STREET, AND TREE NOS. 33-35 & TREE K-M FROM PROPERTY OWNER 296 CODRINGTON STREET.

OFFSITE TREE INVENTORY

Key	Latin Name	Common Name	Canopy Radius (M)
A	*Acer saccharinum*	Silver Maple	7.9
B	*Acer platanoides*	Norway Maple	7.0
C	*Quercus rubra*	Red Oak	5.5
D	*Betula papyrifera*	Paper Birch	4.6
E	*Robinia pseudoacacia*	Native Honeylocust	9.5
F	*Robinia pseudoacacia*	Native Honeylocust	8.7
G	*Juglans nigra*	Black Walnut	7.1
H	*Quercus rubra*	Red Oak	7.6
J-Hedge	*Thuja occidentalis*	Eastern White Cedar	1.5
K	*Picea pungens*	Colorado Blue Spruce	4.0
L	*Acer platanoides*	Norway Maple	3.7
M	*Acer saccharum*	Sugar Maple	4.6

*AERIAL DOES NOT REFLECT EXISTING CONDTIONS
**TREE LOCATIONS GATHERED THROUGH TRIMBLE GNSS UNIT AND ARCGIS SOFTWARE

ONSITE TREE INVENTORY

New key	Latin Name	Common Name	Tree DIA (cm DBH)	Comments	Assessment	Tree Canopy Radius (m)	Remove/ Preserve
1	*Picea abies*	Norway Spruce	54.5	chlorosis, epicormic branching, dead branches, branch dieback	2 Marginal	5.7	Remove
2	*Picea abies*	Norway Spruce	35.5	sap pitching, epicormic branching, branch dieback	3 Fair	4.8	Remove
3	*Acer platanoides*	Norway Maple	37.8	multiple leader included bark, dead branches, epicormic branching,	2 Marginal	5.3	Remove
4	*Quercus rubra*	Red Oak	32.9	lean, frost crack, high vigor, epicormic branching	3 Fair	5.2	Preserve
5	*Acer platanoides*	Norway Maple	Est 39	pruned, multiple leader included bark, epicormic branching, embedded fence	3 Fair	5.0	Preserve
6	*Acer platanoides*	Norway Maple	23.6	pruned, multiple leader included bark minor branch dieback	3 Fair	3.6	Preserve
7	*Gleditsia triacanthos*	Thornless Honeylocust	21.5	pruned, grafted tp tree, lean, epicormic branching	1 Poor	4.5	Preserve
8	*Acer saccharum*	Sugar Maple	19.5, 29.5	multiple trunks, multiple leader included bark, high vigor grafted to fence	3 Fair	4.5	Preserve
9	*Quercus rubra*	Red Oak	Est 130	deadwood, poor form, multiple leader included bark, embedded metal, epicormic branching, major included bark between main leaders,	2 Marginal	9.0	Preserve
10	*Picea pungens*	Colorado Blue Spruce	19.2	multiple leader included bark, pruned, tip dieback, epicormic branching	1 Poor	2.8	Preserve
11	*Picea pungens*	Colorado Blue Spruce	12.5	pruned, one sided branching, dead branches, epicormic branching	1 Poor	3.0	Preserve
12	*Acer saccharum*	Sugar Maple	Est 85	lean, dead leader, epicormic branching, dead stems, multiple leader included bark, cavities, one sided branching to sw	1 Poor	7.1	Preserve
13	*Quercus rubra*	Red Oak	Est 120	included bark callus wood, embedded metal, multiple leader vertical crack epicormic branching, large branch wound, one sided branching	3 Fair	9.5	Preserve
14	*Quercus rubra*	Red Oak	60, 60	one sided branching co dominant, multiple leader included bark, dryad mush, epicormic branching	1 Poor	8.1	Preserve
15	*Picea glauca*	White Spruce	15.5, 14.2	co dominant, witches broom, sap pitching, epicormic branching	1 Poor	1.9	Preserve
16	*Betula papyrifera*	Paper Birch	32.5, 32.6, 30.8, 36.8	leans, included bark, one sided branching epicormic branching	3 Fair	7.7	Preserve
17	*Acer saccharum*	Sugar Maple	59	co dominant stems, lean to north, branch dieback Included bark epicormic branching one sided branching	3 Fair	4.9	Preserve
18-Hedge	*Thuja occidentalis*	Eastern White Cedar	10-20	15 stems, epicormic branching, one sided branching, some stems topped, lower branch dieback, 1 dead leaning over property line	2 Marginal	5.0	Preserve
19-Hedge	*Picea glauca*	White Spruce	15-30	12 stems poor to fair osb to west, bark necrosis, bark beetles, resinosa, some suppressed stems, branch dieback, SE corner poor, center fair	1 Poor	3.0	Preserve
20	*Acer saccharum*	Sugar Maple	18.5	multiple leader included bark, one sided branching, squirrel damage, branch dieback	2 Marginal	4.0	Preserve
21	*Picea glauca*	White Spruce	10	pruned, branch dieback, multiple leader, virginia creeper vine	2 Marginal	1.8	Remove
22	*Picea glauca*	White Spruce	10	pruned, branch dieback, multiple leader, virginia creeper vine	2 Marginal	1.8	Remove
23	*Picea glauca*	White Spruce	10.5	pruned, branch dieback, multiple leader, virginia creeper vine	2 Marginal	1.8	Remove
24-Group	*Thuja occidentalis*	Eastern White Cedar		Epicormic branching, multiple stems	3 Fair		Remove
25	*Taxus canadensis*	Canada yew		Shrub	3 Fair	2.4	Remove
26	*Acer saccharum*	Sugar Maple	Est 47	multiple leader included bark epicormic branching pruned	3 Fair	7.0	Remove
27	*Acer saccharum*	Sugar Maple	Est 36	multiple leader included bark one sided branching epicormic branching branch dieback	2 Marginal	6.8	Remove
28	*Acer saccharum*	Sugar Maple	Est 42	co dominant multiple leader included bark	2 Marginal	6.9	Remove
29	*Acer saccharum*	Sugar Maple	Est 72	co dominant multiple leader included bark pruned dead branches	2 Marginal	8.0	Preserve
30	*Acer saccharum*	Sugar Maple	32	multiple leader included bark epicormic branching	2 Marginal	7.2	Preserve
31	*Malus ssp*	Common Apple	Est 42, 26	deadwood, interior decay, woodpeck holes, epicormic branching alive	1 Poor	2.6	Preserve
32	*Robinia pseudoacacia*	Native Honeylocust	Est 10	poor form	3 Fair	3.0	Preserve
33	*Acer platanoides*	Norway Maple	39.6	lean, multiple leader included bark dead branches, frost crack epicormic branching	2 Marginal	3.5	Preserve
34	*Quercus rubra*	Red Oak	127	multiple leader included bark epicormic branching dead branches	2 Marginal	9.2	Preserve
35	*Quercus rubra*	Red Oak	Est 60, 70	pruned dead branches co dominant multiple leader included bark epicormic branching	2 Marginal	10.7	Preserve
36	*Quercus rubra*	Red Oak	54, 76	One stem at 54 cm, one stem at 76 cm, pruned, multiple leader included bark, epicormic branching, one sided branching	2 Marginal	12.0	Preserve
37	*Quercus rubra*	Red Oak	66, 66, 66, 52	one sided branching epicormic branching 4 stems, bark wound	2 Marginal	9.0	Preserve
38	*Acer platanoides*	Norway Maple	31	multiple leader included bark epicormic branching	3 Fair	6.1	Preserve
39- Shrub Row	*Mixed Shrubs*	Mixed Shrubs	<10	Smokebush, Apple, Spirea, Dogwood, Located along property line	3 Fair	2.2	Preserve

Boundary Tree	
Treee within fence of 16, 20 & 24 Weldon Street Encroachment	

KEY PLAN NTS

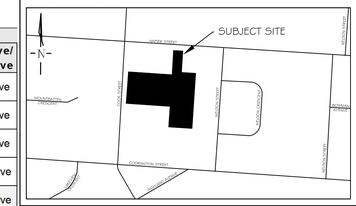

GENERAL NOTES

The Client and its contractors are responsible for all utility locates and confirming all setbacks, elevations, grades, etc. prior to installation of the constructed works.

The Contractor is to report any discrepancies in writing to the Landscape Architect prior to proceeding with the works to determine the impact and suitability of the proposed works. The Landscape Architect will not be responsible for any unapproved adjustments on site.

Construction of the works must conform to Authority requirements and applicable codes where they have jurisdiction.

All specifications and drawings are instruments of service and are the property and ownership of the Landmark Environmental Group Ltd. As such, the drawings shall not be modified or reproduced without the expressed written consent of Landmark Environmental Group Ltd. or they will be considered void. The said drawings are for Site Plan approval only and may require additional detailing prior to tender and construction.

The Landmark Environmental Group Ltd. is not liable for errors or omissions from the use of these drawings prior to approval, seal, signature and date, and will be considered void.

It is advised that the Contractor contact the Landscape Architect prior to commencement of the construction works to ensure that the Contractor has the latest approved drawings.

The Landmark Environmental Group Ltd. is not responsible for the accuracy of the base drawing information (eg Survey, Architectural, Engineering, etc0. If there are any discrepances, the Contractor will refer to the appropriate base drawing information and report discrepancies on the Landscape Drawings to the Landscape Architect.

© Copyright Landmark Environmental Group Ltd, 2022.

LEGEND

- 2 ONSITE TREE LOCATION WITH CANOPY
- B OFFSITE TREE LOCATION WITH CANOPY
- HEDGE LOCATION
- PROPERTY BOUNDARY
- BOUNDARY TREE
- ONSITE TREE WITHIN FENCE OF 16 20 & 24 WELDON STREET ENCROACHMENT

NO	DATE	BY	REVISIONS
2	DEC 14-2022	R.T	DESIGN CONCEPT PLAN AS PER UPDATED SITE PLAN
1	NOV 17-2022	D.L	AS PER UPDATED SITE PLAN

STAMP

ONTARIO ASSOCIATION OF LANDSCAPE ARCHITECTS
JAMES A. MORAN
OALA
DEC 14 2022
MEMBER

APPROVAL

AERIAL COURTESY SIMCOE COUNTY GIS
SURVEY PROVIDED BY RUDY MAK SURVEYING LTD. FILE NO: 14955 DATED SEPTEMBER 25, 2021

LANDMARK ENVIRONMENTAL GROUP LTD
Landscape Architects Consulting Arborists Urban Forestry
LANDSCAPE ARCHITECTS & CONSULTING ARBORISTS
OFFICE: 705-796-1122
info@LEGroupLtd.com
www.LEGroupLtd.com

CLIENT:
MK & COMPANY

PROJECT:
103 NAPIER STREET/95 COOK STREET, BARRIE
RESIDENTIAL-INSTITUTIONAL DEVELOPMENT

DRAWING:
EX-1 : EXISTING CONDITIONS

SCALE BAR: 8m 0 8 16 24
Scale = 1:400

PROJECT NO.: LA 602-21	SCALE: 1:400
MUNICIPAL FILE NO.: D28-050-2021	DATE: JANUARY 11, 2022
DRAWN BY: D.L/R.T CHECKED BY: J.H	DRAWING No.: EX-1

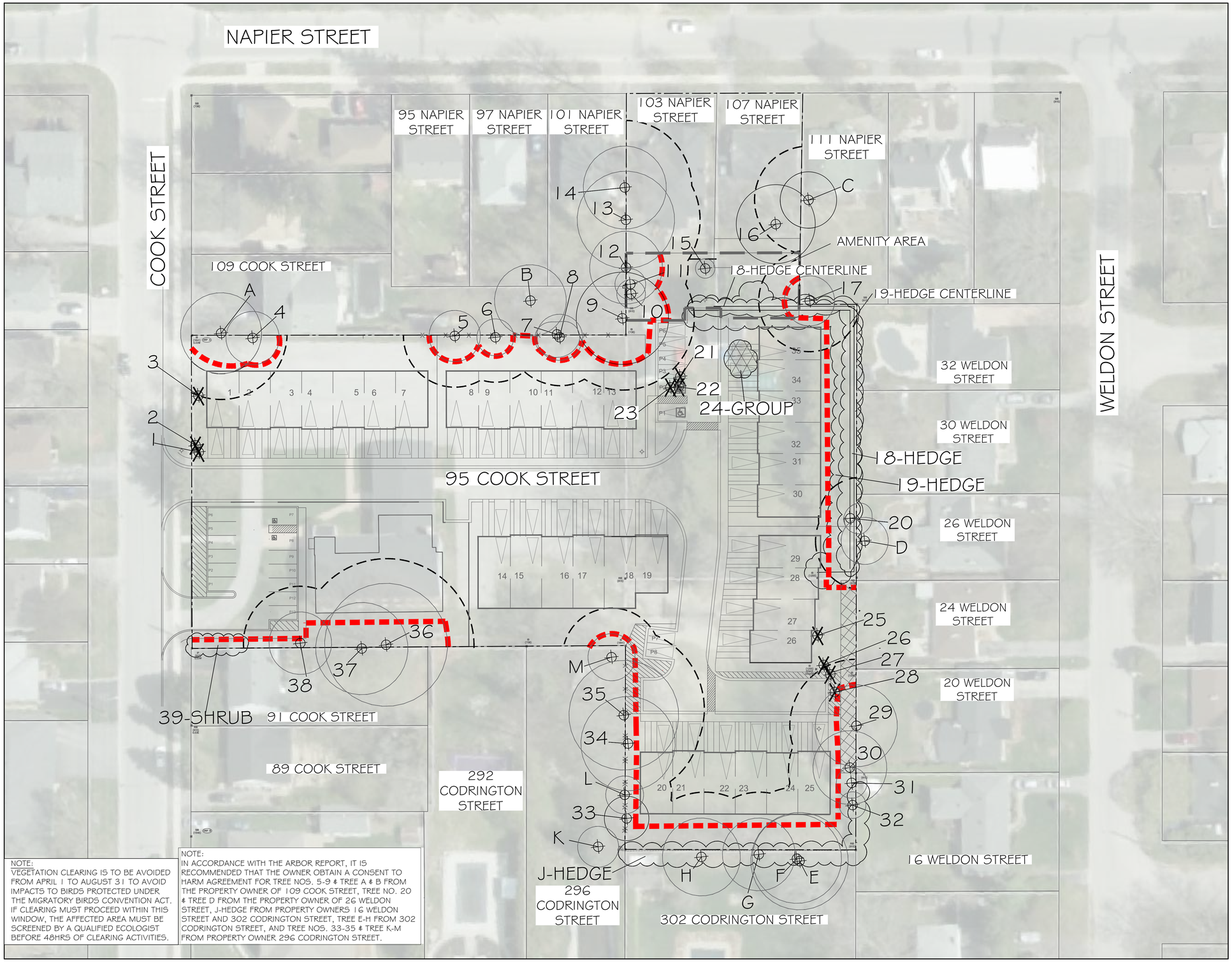

NOTE:
VEGETATION CLEARING IS TO BE AVOIDED FROM APRIL 1 TO AUGUST 31 TO AVOID IMPACTS TO BIRDS PROTECTED UNDER THE MIGRATORY BIRDS CONVENTION ACT. IF CLEARING MUST PROCEED WITHIN THIS WINDOW, THE AFFECTED AREA MUST BE SCREENED BY A QUALIFIED ECOLOGIST BEFORE 48HRS OF CLEARING ACTIVITIES.

NOTE:
IN ACCORDANCE WITH THE ARBOR REPORT, IT IS RECOMMENDED THAT THE OWNER OBTAIN A CONSENT TO HARM AGREEMENT FOR TREE NOS. 5-9 & TREE A & B FROM THE PROPERTY OWNER OF 109 COOK STREET, TREE NO. 20 & TREE D FROM THE PROPERTY OWNER OF 26 WELDON STREET, J-HEDGE FROM PROPERTY OWNERS 16 WELDON STREET AND 302 CODRINGTON STREET, TREE E-H FROM 302 CODRINGTON STREET, AND TREE NOS. 33-35 & TREE K-M FROM PROPERTY OWNER 296 CODRINGTON STREET.

*AERIAL DOES NOT REFLECT EXISTING CONDTIONS
**TREE LOCATIONS GATHERED THROUGH TRIMBLE GNSS UNIT AND ARCGIS SOFTWARE

KEY PLAN NTS

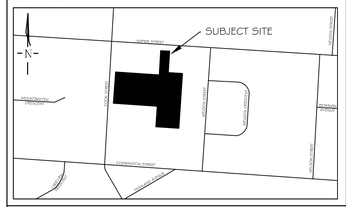

GENERAL NOTES

The Client and its contractors are responsible for all utility locates and confirming all setbacks, elevations, grades, etc. prior to installation of the constructed works.

The Contractor is to report any discrepancies in writing to the Landscape Architect prior to proceeding with the works to determine the impact and suitability of the proposed works. The Landscape Architect will not be responsible for any unapproved adjustments on site.

Construction of the works must conform to Authority requirements and applicable codes where they have jurisdiction.

All specifications and drawings are instruments of service and are the property and ownership of the Landmark Environmental Group Ltd. As such, the drawings shall not be modified or reproduced without the expressed written consent of Landmark Environmental Group Ltd. or they will be considered void. The said drawings are for Site Plan approval only and may require additional detailing prior to tender and construction.

The Landmark Environmental Group Ltd. is not liable for errors or omissions from the use of these drawings prior to approval, seal, signature and date, and will be considered void.

It is advised that the Contractor contact the Landscape Architect prior to commencement of the construction works to ensure that the Contractor has the latest approved drawings.

The Landmark Environmental Group Ltd. is not responsible for the accuracy of the base drawing information (eg Survey, Architectural, Engineering, etc0). If there are any discrepances, the Contractor will refer to the appropriate base drawing information and report discrepancies on the Landscape Drawings to the Landscape Architect.

© Copyright Landmark Environmental Group Ltd, 2022.

LEGEND

- ONSITE TREE LOCATION WITH CANOPY
- OFFSITE TREE LOCATION WITH CANOPY
- HEDGE LOCATION
- PROPERTY BOUNDARY
- GROUPING TO BE REMOVED
- TREE PRESERVATION FENCE
- X TREE RECOMMENDED FOR REMOVAL
- 5M DEVELOPMENT SETBACK LIMIT

NO	DATE	BY	REVISIONS
2	DEC 14-2022	R.T	DESIGN CONCEPT PLAN AS PER UPDATED SITE PLAN
1	NOV 17-2022	D.L	AS PER UPDATED SITE PLAN

STAMP

ONTARIO ASSOCIATION OF LANDSCAPE ARCHITECTS
JAMES A. HOGG
OALA
DEC 14 2022
Member

APPROVAL

AERIAL COURTESY SIMCOE COUNTY GIS
SITE PLAN PROVIDED BY INNOVATIVE PLANNING SOLUTIONS INC.
FILE NO. 20-1006 DATED: NOVEMBER 23, 2021

LANDMARK ENVIRONMENTAL GROUP LTD
Landscape Architects
Consulting Arborists
Urban Forestry

LANDSCAPE ARCHITECTS & CONSULTING ARBORISTS
OFFICE: 705-796-1122
info@LEGroupLtd.com
www.LEGroupLtd.com

CLIENT:
MK & COMPANY

PROJECT:
103 NAPIER STREET/95 COOK STREET, BARRIE
RESIDENTIAL-INSTITUTIONAL DEVELOPMENT

DRAWING:
TP-1: TREE PRESERVATION PLAN 1

SCALE BAR: 7m 0 7 14 21
Scale = 1:350

PROJECT NO.: LA 602-21	SCALE: 1:350
MUNICIPAL FILE NO.: D28-050-2021	DATE: JANUARY 11, 2022
DRAWN BY: D.L/R.T / CHECKED BY: J.H	DRAWING No.: TP-1

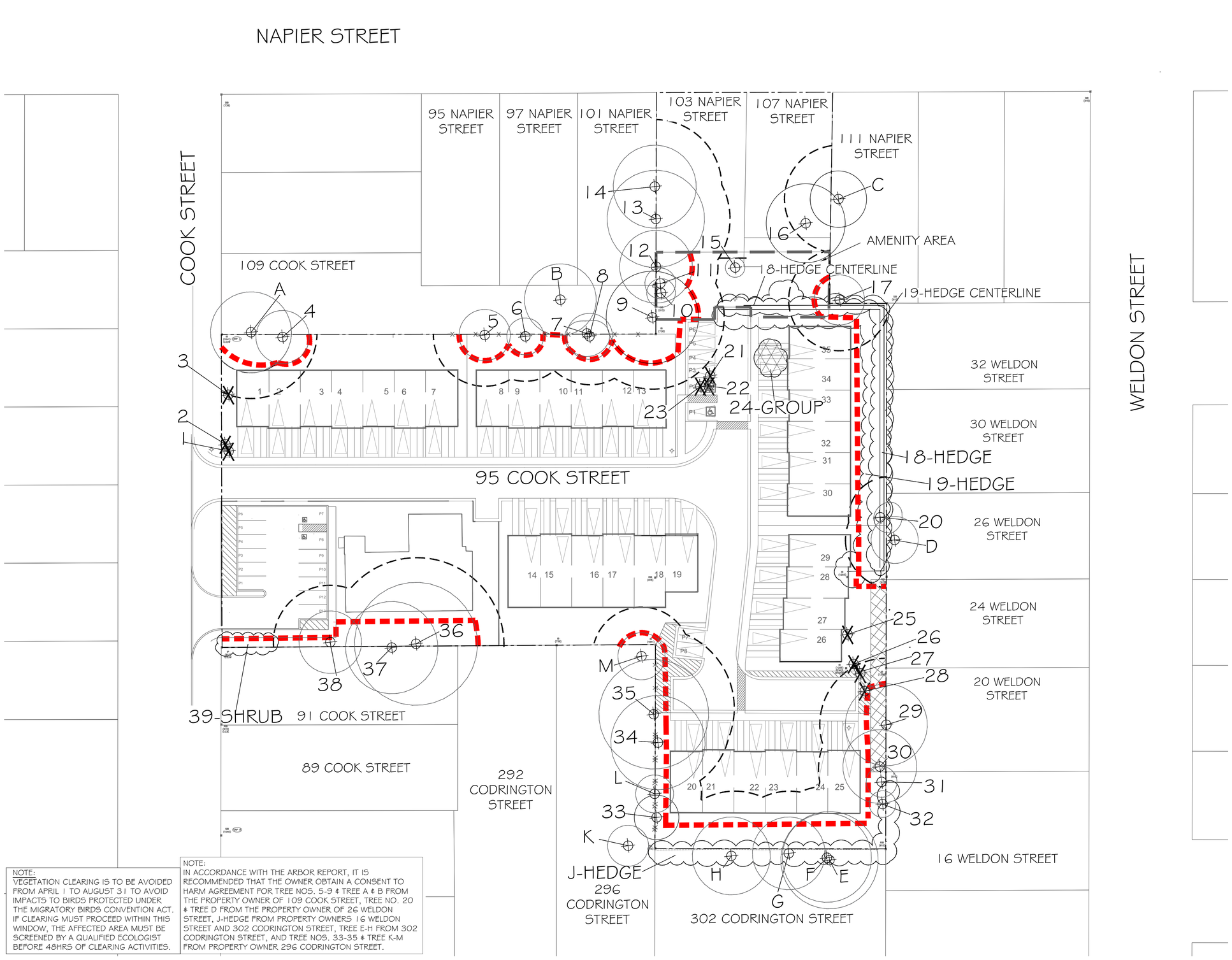

NOTE:
VEGETATION CLEARING IS TO BE AVOIDED FROM APRIL 1 TO AUGUST 31 TO AVOID IMPACTS TO BIRDS PROTECTED UNDER THE MIGRATORY BIRDS CONVENTION ACT. IF CLEARING MUST PROCEED WITHIN THIS WINDOW, THE AFFECTED AREA MUST BE SCREENED BY A QUALIFIED ECOLOGIST BEFORE 48HRS OF CLEARING ACTIVITIES.

NOTE:
IN ACCORDANCE WITH THE ARBOR REPORT, IT IS RECOMMENDED THAT THE OWNER OBTAIN A CONSENT TO HARM AGREEMENT FOR TREE NOS. 5-9 & TREE A & B FROM THE PROPERTY OWNER OF 109 COOK STREET, TREE NO. 20 & TREE D FROM THE PROPERTY OWNER OF 26 WELDON STREET, J-HEDGE FROM PROPERTY OWNERS 16 WELDON STREET AND 302 CODRINGTON STREET, TREE E-H FROM 302 CODRINGTON STREET, AND TREE NOS. 33-35 & TREE K-M FROM PROPERTY OWNER 296 CODRINGTON STREET.

*AERIAL DOES NOT REFLECT EXISTING CONDTIONS
**TREE LOCATIONS GATHERED THROUGH TRIMBLE GNSS UNIT AND ARCGIS SOFTWARE

KEY PLAN NTS

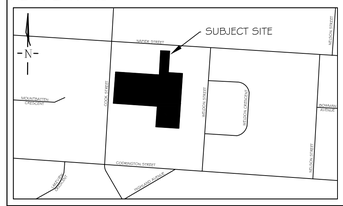

GENERAL NOTES

The Client and its contractors are responsible for all utility locates and confirming all setbacks, elevations, grades, etc. prior to installation of the constructed works.

The Contractor is to report any discrepancies in writing to the Landscape Architect prior to proceeding with the works to determine the impact and suitability of the proposed works. The Landscape Architect will not be responsible for any unapproved adjustments on site.

Construction of the works must conform to Authority requirements and applicable codes where they have jurisdiction.

All specifications and drawings are instruments of service and are the property and ownership of the Landmark Environmental Group Ltd. As such, the drawings shall not be modified or reproduced without the expressed written consent of Landmark Environmental Group Ltd. or they will be considered void. The said drawings are for Site Plan approval only and may require additional detailing prior to tender and construction.

The Landmark Environmental Group Ltd. is not liable for errors or omissions from the use of these drawings prior to approval, seal, signature and date, and will be considered void.

It is advised that the Contractor contact the Landscape Architect prior to commencement of the construction works to ensure that the Contractor has the latest approved drawings.

The Landmark Environmental Group Ltd. is not responsible for the accuracy of the base drawing information (eg Survey, Architectural, Engineering, etc0. If there are any discrepancies, the Contractor will refer to the appropriate base drawing information and report discrepancies on the Landscape Drawings to the Landscape Architect.

© Copyright Landmark Environmental Group Ltd, 2022.

LEGEND

- ONSITE TREE LOCATION WITH CANOPY
- OFFSITE TREE LOCATION WITH CANOPY
- HEDGE LOCATION
- PROPERTY BOUNDARY
- GROUPING TO BE REMOVED
- TREE PRESERVATION FENCE
- X TREE RECOMMENDED FOR REMOVAL
- 5M DEVELOPMENT SETBACK LIMIT

NO	DATE	BY	REVISIONS
2	DEC 14-2022	R.T	DESIGN CONCEPT PLAN AS PER UPDATED SITE PLAN
1	NOV 17-2022	D.L	AS PER UPDATED SITE PLAN

STAMP

ONTARIO ASSOCIATION OF LANDSCAPE ARCHITECTS
JAMES A. MOGK
OALA
DEC 14 2022
MEMBER

APPROVAL

AERIAL COURTESY SIMCOE COUNTY GIS
SITE PLAN PROVIDED BY INNOVATIVE PLANNING SOLUTIONS INC.
FILE NO. 20-1006 DATED: NOVEMBER 23, 2021

LANDMARK ENVIRONMENTAL GROUP LTD
Landscape Architects Consulting Arborists Urban Forestry
LANDSCAPE ARCHITECTS & CONSULTING ARBORISTS
OFFICE: 705-796-1122
info@LEGroupLtd.com
www.LEGroupLtd.com

CLIENT:
MK & COMPANY

PROJECT:
103 NAPIER STREET/95 COOK STREET, BARRIE
RESIDENTIAL-INSTITUTIONAL DEVELOPMENT

DRAWING:
TP-2: TREE PRESERVATION PLAN 2

SCALE BAR: 7m 0 7 14 21
Scale = 1:350

PROJECT NO.: LA 602-21	SCALE: 1:350
MUNICIPAL FILE NO.: D28-050-2021	DATE: JANUARY 11, 2022
DRAWN BY: D.L/R.T CHECKED BY: J.H	DRAWING No.: TP-2

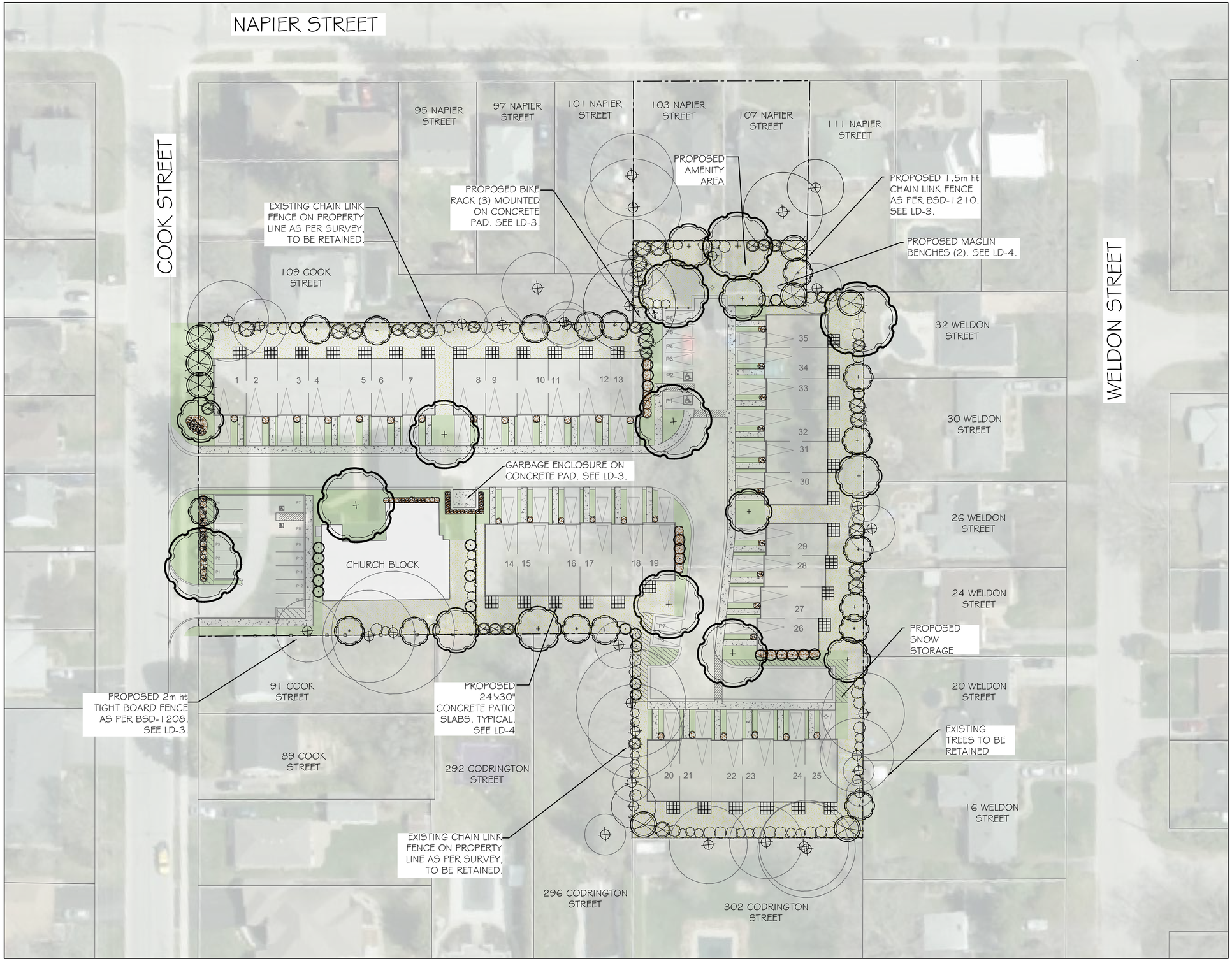

*AERIAL DOES NOT REFLECT EXISTING CONDTIONS
**TREE LOCATIONS GATHERED THROUGH TRIMBLE GNSS UNIT AND ARCGIS SOFTWARE

KEY PLAN NTS

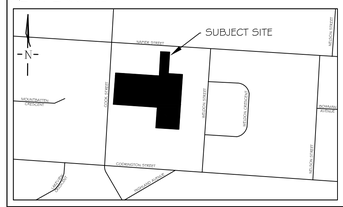

GENERAL NOTES

The Client and its contractors are responsible for all utility locates and confirming all setbacks, elevations, grades, etc. prior to installation of the constructed works.

The Contractor is to report any discrepancies in writing to the Landscape Architect prior to proceeding with the works to determine the impact and suitability of the proposed works. The Landscape Architect will not be responsible for any unapproved adjustments on site.

Construction of the works must conform to Authority requirements and applicable codes where they have jurisdiction.

All specifications and drawings are instruments of service and are the property and ownership of the Landmark Environmental Group Ltd. As such, the drawings shall not be modified or reproduced without the expressed written consent of Landmark Environmental Group Ltd. or they will be considered void. The said drawings are for Site Plan approval only and may require additional detailing prior to tender and construction.

The Landmark Environmental Group Ltd. is not liable for errors or omissions from the use of these drawings prior to approval, seal, signature and date, and will be considered void.

It is advised that the Contractor contact the Landscape Architect prior to commencement of the construction works to ensure that the Contractor has the latest approved drawings.

The Landmark Environmental Group Ltd. is not responsible for the accuracy of the base drawing information (eg Survey, Architectural, Engineering, etc0). If there are any discrepancies, the Contractor will refer to the appropriate base drawing information and report discrepancies on the Landscape Drawings to the Landscape Architect.

© Copyright Landmark Environmental Group Ltd, 2022.

LEGEND

- ONSITE TREE LOCATION WITH CANOPY
- PROPOSED DECIDUOUS TREE
- PROPOSED CONIFEROUS TREE
- PROPOSED CONIFEROUS SHRUBS
- PROPOSED DECIDUOUS SHRUBS
- Bs/2 PLANT KEY
- PROPOSED SOD (1,355m²)
- PROPOSED SEED (2,613m²)
- PROPOSED CEDAR MULCH
- PROPOSED CONCRETE
- PROPERTY BOUNDARY
- PROPOSED CHAIN LINK FENCE BSD-1210 (85 lin. m)
- PROPOSED TIGHBOARD FENCE BSD -1208 (69lin. m)
- EXISTING CHAIN LINK FENCE TO REMAIN

NO	DATE	BY	REVISIONS
2	DEC 14-2022	R.T	DESIGN CONCEPT PLAN AS PER UPDATED SITE PLAN
1	NOV 17-2022	D.L	AS PER UPDATED SITE PLAN

STAMP

ONTARIO ASSOCIATION OF LANDSCAPE ARCHITECTS
JAMES A. MOBLE
OALA
DEC 14 2022
MEMBER

APPROVAL

AERIAL COURTESY SIMCOE COUNTY GIS
SITE PLAN PROVIDED BY INNOVATIVE PLANNING SOLUTIONS INC.
FILE NO. 20-1006 DATED: NOVEMBER 23, 2021

LANDMARK ENVIRONMENTAL GROUP LTD
Landscape Architects Consulting Arborists Urban Forestry
LANDSCAPE ARCHITECTS & CONSULTING ARBORISTS
OFFICE: 705-796-1122
info@LEGroupLtd.com
www.LEGroupLtd.com

CLIENT: MK & COMPANY

PROJECT: 103 NAPIER STREET/95 COOK STREET, BARRIE
RESIDENTIAL-INSTITUTIONAL DEVELOPMENT

DRAWING: L-1 (A): LANDSCAPE CONCEPT PLAN C/W AERIAL

SCALE BAR: 7m 0 7 14 21
Scale = 1:350

PROJECT NO.: LA 602-21	SCALE: 1:350
MUNICIPAL FILE NO.: D28-050-2021	DATE: JANUARY 11, 2022
DRAWN BY: D.L/R.T CHECKED BY: J.H	DRAWING No.: L-1 (A)

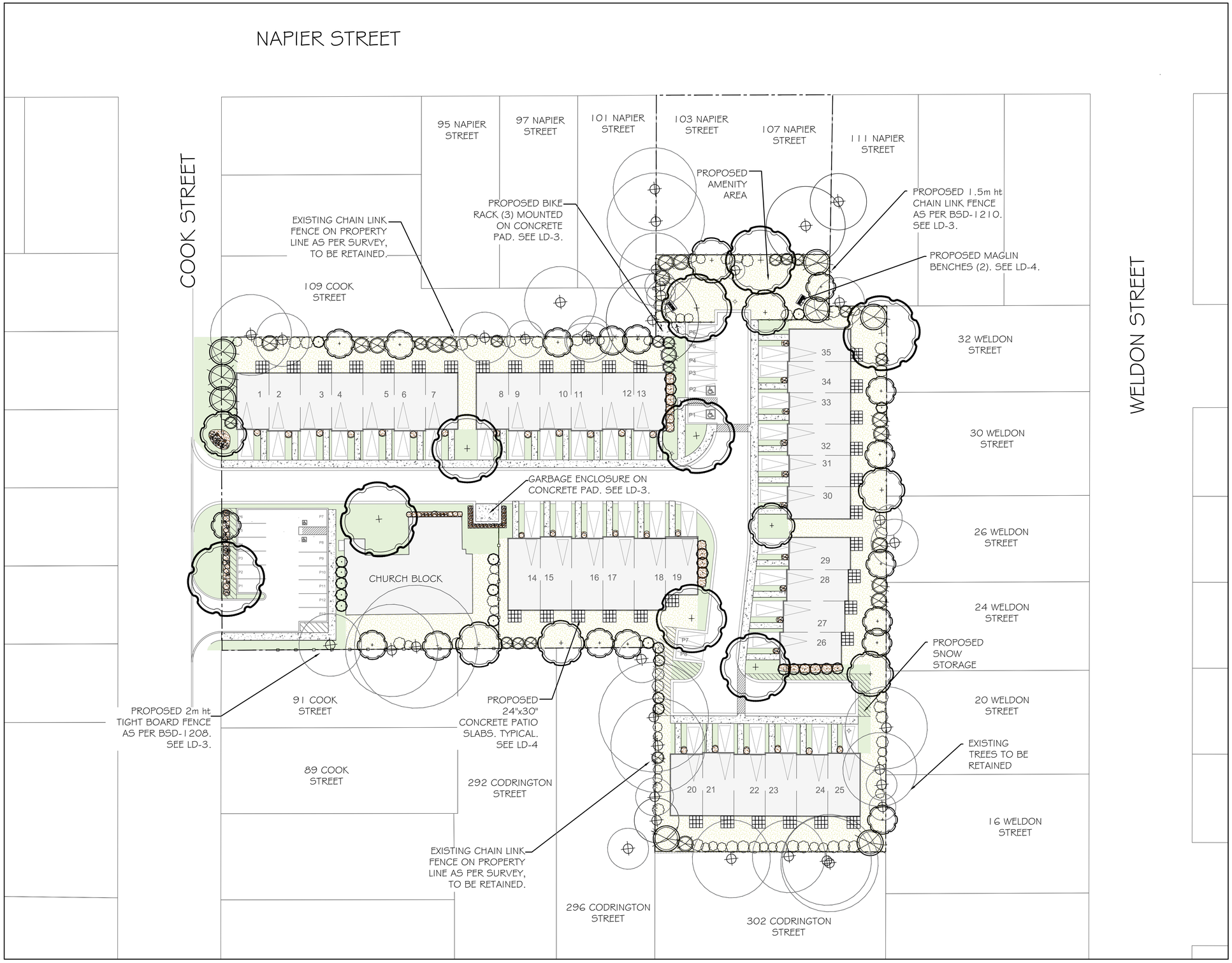

*AERIAL DOES NOT REFLECT EXISTING CONDTIONS
**TREE LOCATIONS GATHERED THROUGH TRIMBLE GNSS UNIT AND ARCGIS SOFTWARE

KEY PLAN NTS

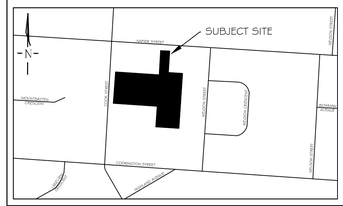

GENERAL NOTES

The Client and its contractors are responsible for all utility locates and confirming all setbacks, elevations, grades, etc. prior to installation of the constructed works.

The Contractor is to report any discrepancies in writing to the Landscape Architect prior to proceeding with the works to determine the impact and suitability of the proposed works. The Landscape Architect will not be responsible for any unapproved adjustments on site.

Construction of the works must conform to Authority requirements and applicable codes where they have jurisdiction.

All specifications and drawings are instruments of service and are the property and ownership of the Landmark Environmental Group Ltd. As such, the drawings shall not be modified or reproduced without the expressed written consent of Landmark Environmental Group Ltd. or they will be considered void. The said drawings are for Site Plan approval only and may require additional detailing prior to tender and construction.

The Landmark Environmental Group Ltd. is not liable for errors or omissions from the use of these drawings prior to approval, seal, signature and date, and will be considered void.

It is advised that the Contractor contact the Landscape Architect prior to commencement of the construction works to ensure that the Contractor has the latest approved drawings.

The Landmark Environmental Group Ltd. is not responsible for the accuracy of the base drawing information (eg Survey, Architectural, Engineering, etcO. If there are any discrepancies, the Contractor will refer to the appropriate base drawing information and report discrepancies on the Landscape Drawings to the Landscape Architect.

© Copyright Landmark Environmental Group Ltd, 2022.

LEGEND

- ONSITE TREE LOCATION WITH CANOPY
- PROPOSED DECIDUOUS TREE
- PROPOSED CONIFEROUS TREE
- PROPOSED CONIFEROUS SHRUBS
- PROPOSED DECIDUOUS SHRUBS
- P6/2 PLANT KEY
- PROPOSED SOD (1,355m²)
- PROPOSED SEED (2,613m²)
- PROPOSED CEDAR MULCH
- PROPOSED CONCRETE
- PROPERTY BOUNDARY
- PROPOSED CHAIN LINK FENCE BSD-1210 (85 lin. m)
- PROPOSED TIGHBOARD FENCE BSD -1208 (69lin. m)
- EXISTING CHAIN LINK FENCE TO REMAIN

NO	DATE	BY	REVISIONS
2	DEC 14-2022	R.T	DESIGN CONCEPT PLAN AS PER UPDATED SITE PLAN
1	NOV 17-2022	D.L	AS PER UPDATED SITE PLAN

STAMP

ONTARIO ASSOCIATION OF LANDSCAPE ARCHITECTS
JAMES A. HOLT
OALA
DEC 14 2022
MEMBER

APPROVAL

AERIAL COURTESY SIMCOE COUNTY GIS
SITE PLAN PROVIDED BY INNOVATIVE PLANNING SOLUTIONS INC.
FILE NO. 20-1006 DATED: NOVEMBER 23, 2021

LANDMARK ENVIRONMENTAL GROUP LTD
Landscape Architects Consulting Arborists Urban Forestry
LANDSCAPE ARCHITECTS & CONSULTING ARBORISTS
OFFICE: 705-796-1122
info@LEGroupLtd.com
www.LEGroupLtd.com

CLIENT: MK & COMPANY

PROJECT: 103 NAPIER STREET/95 COOK STREET, BARRIE
RESIDENTIAL-INSTITUTIONAL DEVELOPMENT

DRAWING: L-1 : LANDSCAPE CONCEPT PLAN

SCALE BAR: 7m 0 7 14 21
Scale = 1:350

PROJECT NO.: LA 602-21	SCALE: 1:350
MUNICIPAL FILE NO.: D28-050-2021	DATE: JANUARY 11, 2022
DRAWN BY: D.L/R.T CHECKED BY: J.H	DRAWING No.: L-1

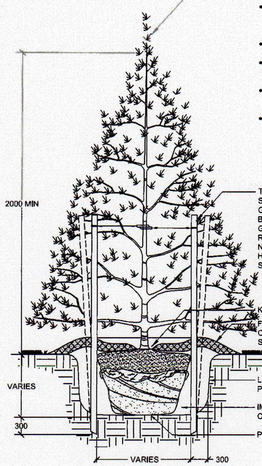

DO NOT PRUNE LEADERS, TREES WITH DAMAGED OR MISSING LEADERS WILL NOT BE ACCEPTED

TREE CROWN NOTES:

- REMOVE AT TIME OF PLANTING ANY DEAD, BROKEN OR DAMAGED LIMBS INCLUDING INTERFERING BRANCHES, DOUBLE LEADERS AND NARROW BRANCH UNIONS
- REMOVE ALL LABELS AND TAGS AT TIME OF PLANTING
- BINDING AND TIES MUST BE REMOVED IMMEDIATELY FOLLOWING THE INSTALLATION OF THE TREE
- TREE HEIGHT IS MEASURED FROM THE FIRST WHORL AND NOT THE TOP OF LEADER
- TREES ARE TO BE PLANTED PLUM AND HAVE BOTH FULL FORM AND HEALTHY CANOPY STRUCTURE. ANY TREES WHICH DO NOT MEET THIS CRITERIA AND/OR HAVE WEAK BRANCHING STRUCTURE, DO NOT HAVE STRAIGHT TRUNKS OR HAVE UNBALANCED CROWNS WILL NOT BE ACCEPTED

TREES ARE TO BE STAKED WITH (2) TWO SOFTWOOD STAKES (38x38x2400mm) EXTENDING 300mm INTO FIRM GROUND AT AN ANGLE AND SECURED VERTICAL PRIOR TO BACKFILLING THE TREE PIT. SECURE USING #12 GAUGE GALVANIZED WIRE ENCASED IN 12mm DIAMETER REINFORCED RUBBER HOSE (ENSURING WIRE ENDS DO NOT PROTRUDE) OR APPROVED EQUIVALENT. STAKING HARDWARE TO BE REMOVED AFTER ONE GROWING SEASON

KEEP MULCH 50-100mm AWAY FROM TRUNK

FORM A 100mm HIGH EARTH SAUCER BEYOND THE EDGE OF THE ROOT BALL AND COVER WITH 100mm OF SHREDDED CEDAR MULCH

LOOSEN OR SCARIFY THE INSIDE SURFACE OF THE PLANTING HOLE PRIOR TO INSTALLATION OF THE TREE

IMPORTED FRIABLE SCREENED LOAM TOPSOIL COMPACTED TO ELIMINATE AIR POCKETS

PLACE ROOT BALL ON UNEXCAVATED OR TAMPED SOIL

1. ALL CONIFEROUS TREE PLANTING SHALL HAVE A MINIMUM 600mm DIAMETER ROOT BALL.
2. CUT AND REMOVE ALL WIRE, ROPE AND BURLAP FROM THE TOP 150mm OF THE ROOT BALL AT THE TIME OF PLANTING.
3. FOR POORLY DRAINED OR COMPACTED SOILS THE ROOT BALL SHALL BE PLACED SO THAT THE ROOT COLLAR IS A MAXIMUM OF 100mm ABOVE THE FINISHED GRADE. FOR ALL OTHER INSTALLATIONS THE ROOT COLLAR SHALL BE AT OR 50mm ABOVE FINISHED GRADE.
4. ALL TWINE AND BURLAP MUST BE BIODEGRADABLE (UNTREATED).
5. ALL DIMENSIONS ARE IN MILLIMETRES UNLESS OTHERWISE NOTED.

APPROVED
DATE June 11/15
DIRECTOR OF ENGINEERING

The City of BARRIE
STANDARD DETAIL

CONIFEROUS TREE PLANTING DETAIL

REV No.	DATE: JUNE 2015
4	SCALE: N.T.S.

BSD-1312
FORMERLY BSD-30

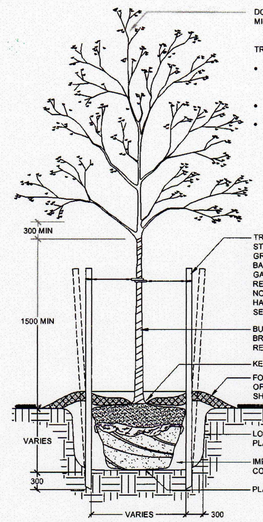

DO NOT PRUNE LEADERS, TREES WITH DAMAGED OR MISSING LEADERS WILL NOT BE ACCEPTED

TREE CROWN NOTES:

- REMOVE AT TIME OF PLANTING ANY DEAD, BROKEN OR DAMAGED LIMBS INCLUDING INTERFERING BRANCHES, DOUBLE LEADERS AND NARROW BRANCH UNIONS
- REMOVE ALL LABELS AND TAGS AT TIME OF PLANTING
- TREES ARE TO BE PLANTED PLUM AND HAVE BOTH FULL FORM AND HEALTHY CANOPY STRUCTURE. ANY TREES WHICH DO NOT MEET THIS CRITERIA AND/OR HAVE WEAK BRANCHING STRUCTURE, DO NOT HAVE STRAIGHT TRUNKS OR HAVE UNBALANCED CROWNS WILL NOT BE ACCEPTED

TREES ARE TO BE STAKED WITH (2) TWO SOFTWOOD STAKES (38x38x2400mm) EXTENDING 300mm INTO FIRM GROUND AT AN ANGLE AND SECURED VERTICAL PRIOR DO BACKFILLING THE TREE PIT. SECURE USING #12 GAUGE GALVANIZED WIRE ENCASED IN 12mm DIAMETER REINFORCED RUBBER HOSE (ENSURING WIRE ENDS TO NOT PROTRUDE) OR APPROVED EQUIVALENT. STAKING HARDWARE TO BE REMOVED AFTER ONE GROWING SEASON

BURLAP WRAP TREE FROM TOP OF ROOT BALL TO FIRST BRANCH UNION AND SECURE WITH BIODEGRADABLE TIES. REMOVE AFTER ONE GROWING SEASON

KEEP MULCH 50-100mm AWAY FROM TRUNK

FORM A 100mm HIGH EARTH SAUCER BEYOND THE EDGE OF THE ROOT BALL AND COVER WITH 100mm OF SHREDDED CEDAR MULCH

LOOSEN OR SCARIFY THE INSIDE SURFACE OF THE PLANTING HOLE PRIOR TO INSTALLATION OF THE TREE

IMPORTED FRIABLE SCREENED LOAM TOPSOIL COMPACTED TO ELIMINATE AIR POCKETS

PLACE ROOT BALL ON UNEXCAVATED OR TAMPED SOIL

1. ALL CALIPER TREE PLANTING SHALL HAVE A MINIMUM 600mm DIAMETER ROOT BALL.
2. CUT AND REMOVE ALL WIRE, ROPE AND BURLAP FROM THE TOP 150mm OF THE ROOT BALL AT THE TIME OF PLANTING.
3. FOR POORLY DRAINED OR COMPACTED SOILS THE ROOT BALL SHALL BE PLACED SO THAT THE ROOT COLLAR IS A MAXIMUM OF 100mm ABOVE THE FINISHED GRADE. FOR ALL OTHER INSTALLATIONS THE ROOT COLLAR SHALL BE AT OR 50mm ABOVE FINISHED GRADE.
4. ALL TREES WITHIN 3.0m OF A SIDEWALK OR DRIVEWAY MUST ALSO HAVE A COORDINATED INSTALLATION OF AN APPROVED ROOT BARRIER INSTALLED IN ADDITION TO THE TREE FOR ALL STREETSCAPE APPLICATIONS.
5. ALL TWINE AND BURLAP MUST BE BIODEGRADABLE (UNTREATED).
6. ALL DIMENSIONS ARE IN MILLIMETRES UNLESS OTHERWISE NOTED.

APPROVED
DATE June 11/15
DIRECTOR OF ENGINEERING

The City of BARRIE
STANDARD DETAIL

DECIDUOUS TREE PLANTING DETAIL

REV No.	DATE: JUNE 2015
4	SCALE: N.T.S.

BSD-1310
FORMERLY BSD-29

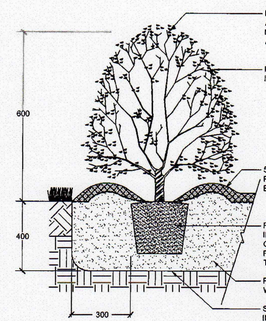

PRUNE DEAD OR BROKEN BRANCHES ONLY IMMEDIATELY AFTER PLANTING. PRUNING IS TO BE COMPLETED IN A MANNER WHICH PRESERVES THE NATURAL CHARACTER AND FORM OF THE PLANT

REMOVE ALL NURSERY TAGS AND FLAGGING TAPE IMMEDIATELY UPON INSTALLATION

50-100mm DEPTH OF SHREDDED CEDAR MULCH TO BE PLACED OVER A MINIMUM 150R FILTER CLOTH OR EQUIVALENT FOR ALL CONTINUOUS PLANTING BEDS

REMOVE NURSERY POTS OR WRAP PRIOR TO PLACEMENT, IF ROOT BOUND SLICE ROOT MASS VERTICALLY AND GENTLY SEPARATE EXTERIOR ROOTS. FOR FIBER POTS, REMOVE BOTTOM OF POT AND SLICE POT VERTICALLY THREE TIMES PRIOR TO PLACEMENT

PLANTING SOIL MIX AS SPECIFIED. STRAIGHT TOP SOIL WILL NOT BE ACCEPTED FOR USE IN PLANTING BEDS

SCARIFY SURFACE OF SUBSOIL PRIOR TO PLANTING OR INSTALLATION OF PLANTING SOIL MIX

1. PLANTING METHOD ILLUSTRATED APPLIES TO CONTAINER / POTTED MATERIAL ONLY.
2. PLANTING DETAIL DOES NOT SPECIFICALLY RELATE TO ANY PARTICULAR SPECIES AND SHALL BE APPLIED TO BOTH DECIDUOUS AND CONIFEROUS POTTED MATERIAL.
3. SET SHRUBS 50mm HIGHER THAN GRADE TO ALLOW FOR SETTLEMENT.
4. ALL SHRUB PLANTING IS TO OCCUR IN CONTINUOUS MULCHED PLANTING BEDS WITH WEED CONTROL /FILTER FABRIC.
5. DO NOT COVER THE BASE OF SHRUB WITH MULCH.
6. ALL SOIL SHALL BE ADEQUATELY COMPACTED TO PREVENT AIR POCKETS AND SETTLEMENT.
5. ALL DIMENSIONS ARE IN MILLIMETRES UNLESS OTHERWISE NOTED.

APPROVED
DATE June 11/15
DIRECTOR OF ENGINEERING

The City of BARRIE
STANDARD DETAIL

CONTAINER GROWN SHRUB PLANTING DETAIL

REV No.	DATE: JUNE 2015
4	SCALE: N.T.S.

BSD-1314
FORMERLY BSD-31

PLANTING NOTES

1. The Contractor shall review all information in all drawings details and specifications and report any discrepancies to the Landscape Architect in writing prior to commencement of works.
2. All planting and related work shall be completed by experienced personnel under the direction and supervision of a qualified foreman.
3. All plant material which cannot be planted immediately will be properly heeled in or covered with a similar material which will keep root surfaces moist until planted.
4. All plant material and operations shall meet or exceed current horticultural standards of the Canadian Nursery Landscape Association. All plant material to be No. 1 Grade Nursery Stock. All unsatisfactory stock including field grown will be refused on site.
5. The Landscape Architect reserves the right to reject any material, plantings and sod prior to or after installation which does not conform to approved specifications in accordance with approved details. The Contractor will be asked to remove any unapproved material which does not conform to specifications unless there is prior written agreement with the Landscape Architect.
6. Trees and shrubs shall have an uncut, strong central leader, be sound, healthy, vigorous, well-branched, densely foliated, free of disease, insects and have well-developed root systems.
7. Where applicable, sod to be Canada No. 1 Nursery Sod, meeting Ontario Sod Growers Association Standards. All Areas to receive 100mm minimum depth of topsoil under sod unless otherwise indicated. See Drawings and Specifications for areas to be mulched.
8. The Contractor shall stake out all planting locations for approval by the Landscape Architect or Contract Administrator prior to planting. Where dimensions are not provided, the drawing may be scaled ONLY to determine approximate locations of plant material. Dimensions are in millimeters unless otherwise stated.
9. All mass plantings shall be in continuous beds with mulch as specified in planting details.
10. All planting will be under warrantee by the Contractor for a minimum of 1 year. The Contractor shall water at time of planting and whenever deemed necessary to maintain trees in a healthy condition. Apply aqueous fertilizer in a ratio of 10-6-4 in accordance with manufacturers instructions. Sod, where specified, to be maintained and guaranteed until established, minimum after two mowings.
11. Unwrap or do not wrap tree trunks. Stake trees in accordance with required specifications.
12. Provide sufficient rodent protection on all new planting so as to deter bark or shoot damage by rodents. Significant rodent damage, as determined by the Landscape Architect will require plant replacement.

LANDMARK ENVIRONMENTAL GROUP LTD
Landscape Architects
Consulting Arborists
Urban Forestry

PLANT DENSITY CALCULATIONS

AREA: 11,331.55 SQUARE METERS | TYPE: RESIDENTIAL & INSTITUTIONAL

REQUIRED MIN. TOTALS	PROPOSED TOTALS	VEGETATION TYPE	REQUIRED SIZING
57	57	DECIDUOUS TREES	60mm CAL
29	38	EVERGREEN TREES	2m HT
114	114	DECIDUOUS SHRUBS	0.6-1.2m HT
57	57	EVERGREEN SHRUBS	0.45m SPR /1.2m HT

KEY PLAN NTS

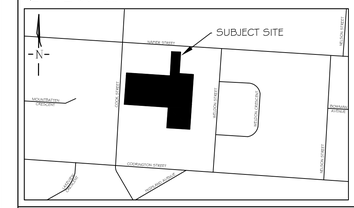

GENERAL NOTES

The Client and its contractors are responsible for all utility locates and confirming all setbacks, elevations, grades, etc. prior to installation of the constructed works.

The Contractor is to report any discrepancies in writing to the Landscape Architect prior to proceeding with the works to determine the impact and suitability of the proposed works. The Landscape Architect will not be responsible for any unapproved adjustments on site.

Construction of the works must conform to Authority requirements and applicable codes where they have jurisdiction.

All specifications and drawings are instruments of service and are the property and ownership of the Landmark Environmental Group Ltd. As such, the drawings shall not be modified or reproduced without the expressed written consent of Landmark Environmental Group Ltd. or they will be considered void. The said drawings are for Site Plan approval only and may require additional detailing prior to tender and construction.

The Landmark Environmental Group Ltd. is not liable for errors or omissions from the use of these drawings prior to approval, seal, signature and date, and will be considered void.

It is advised that the Contractor contact the Landscape Architect prior to commencement of the construction works to ensure that the Contractor has the latest approved drawings.

The Landmark Environmental Group Ltd. is not responsible for the accuracy of the base drawing information (eg Survey, Architectural, Engineering, etcO. If there are any discrepancies, the Contractor will refer to the appropriate base drawing information and report discrepancies on the Landscape Drawings to the Landscape Architect.

© Copyright Landmark Environmental Group Ltd, 2022.

LEGEND

NO.	DATE	BY	REVISIONS
2	DEC 14-2022	R.T	DESIGN CONCEPT PLAN AS PER UPDATED SITE PLAN
1	NOV 17-2022	D.L	AS PER UPDATED SITE PLAN

STAMP

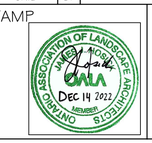

APPROVAL

LANDMARK ENVIRONMENTAL GROUP LTD
Landscape Architects
Consulting Arborists
Urban Forestry

LANDSCAPE ARCHITECTS & CONSULTING ARBORISTS
OFFICE: 705-796-1122
info@LEGroupLtd.com
www.LEGroupLtd.com

CLIENT:
MK & COMPANY

PROJECT:
103 NAPIER STREET/95 COOK STREET, BARRIE
RESIDENTIAL-INSTITUTIONAL DEVELOPMENT

DRAWING: LD-1 : DETAILS

SCALE BAR:

PROJECT NO.: LA 602-21	SCALE: N.T.S
MUNICIPAL FILE NO.: D28-050-2021	DATE: JANUARY 11, 2022
DRAWN BY: D.L/R.T — CHECKED BY: J.H	DRAWING No.: LD-1

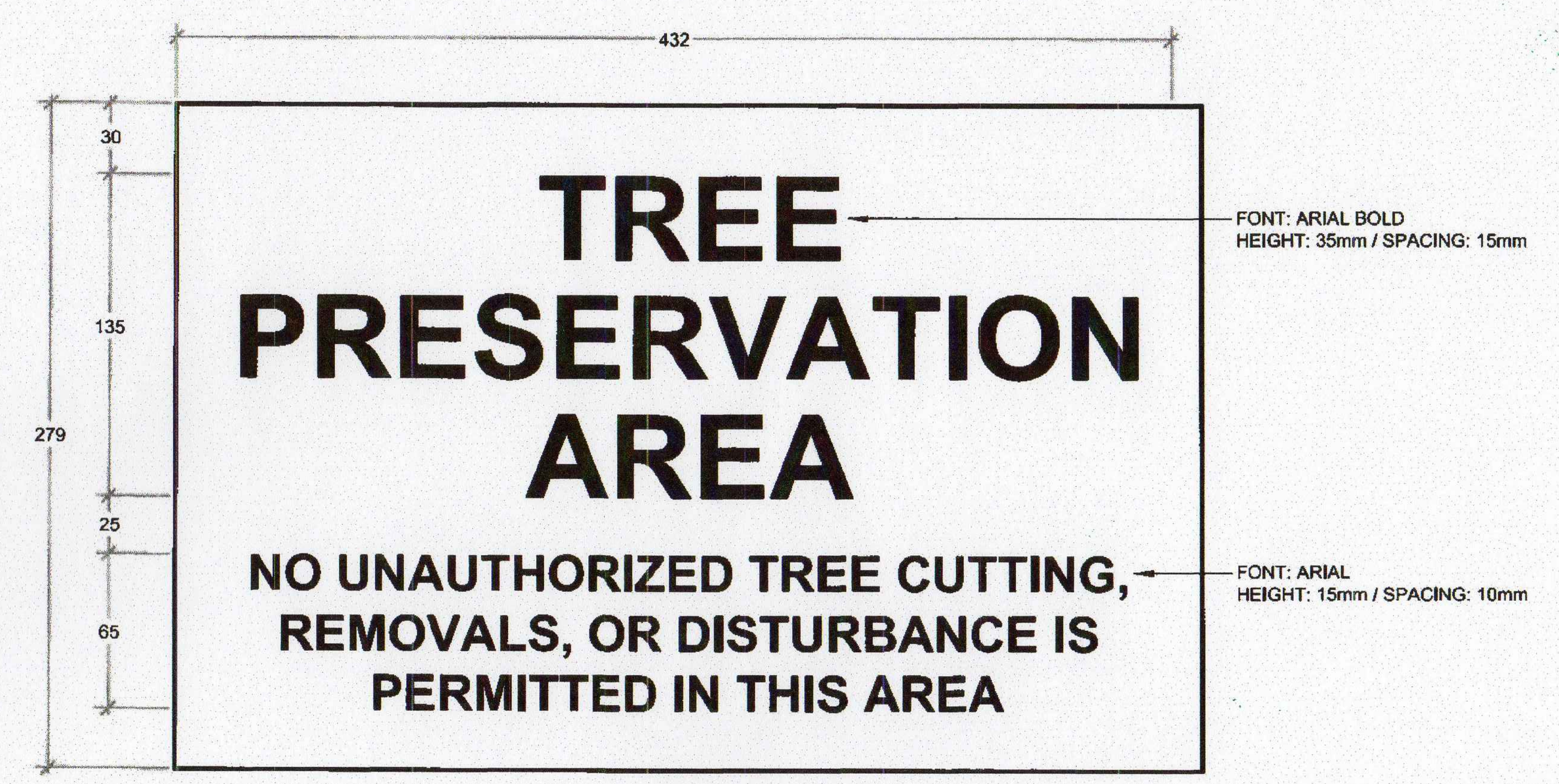

1. SIGNS MUST BE FABRICATED FROM WEATHER RESISTANT MATERIAL.
2. SIGNS ARE TO BE SECURELY FASTENED AND PLACED IN 50 METER INTERVALS ALONG ALL TREE PRESERVATION FENCING.
3. SIGNS MUST REMAIN POSTED FOR THE DURATION OF THE PROJECT OR UNTIL APPROVAL TO REMOVE PRESERVATION FENCING IS PROVIDED BY THE MUNICIPALITY.
4. ALL DIMENSIONS ARE IN MILLIMETRES.
5. THIS DETAIL IS TO BE USED IN CONJUNCTION WITH BSD-1230 AND BSD-1232.

The City of BARRIE STANDARD DETAIL	TREE PRESERVATION AREA TEMPLATE	REV No. 1	DATE: JUNE 2015 / SCALE: N.T.S.	APPROVED DATE June 11/15 ... DIRECTOR OF ENGINEERING
		BSD-1231		

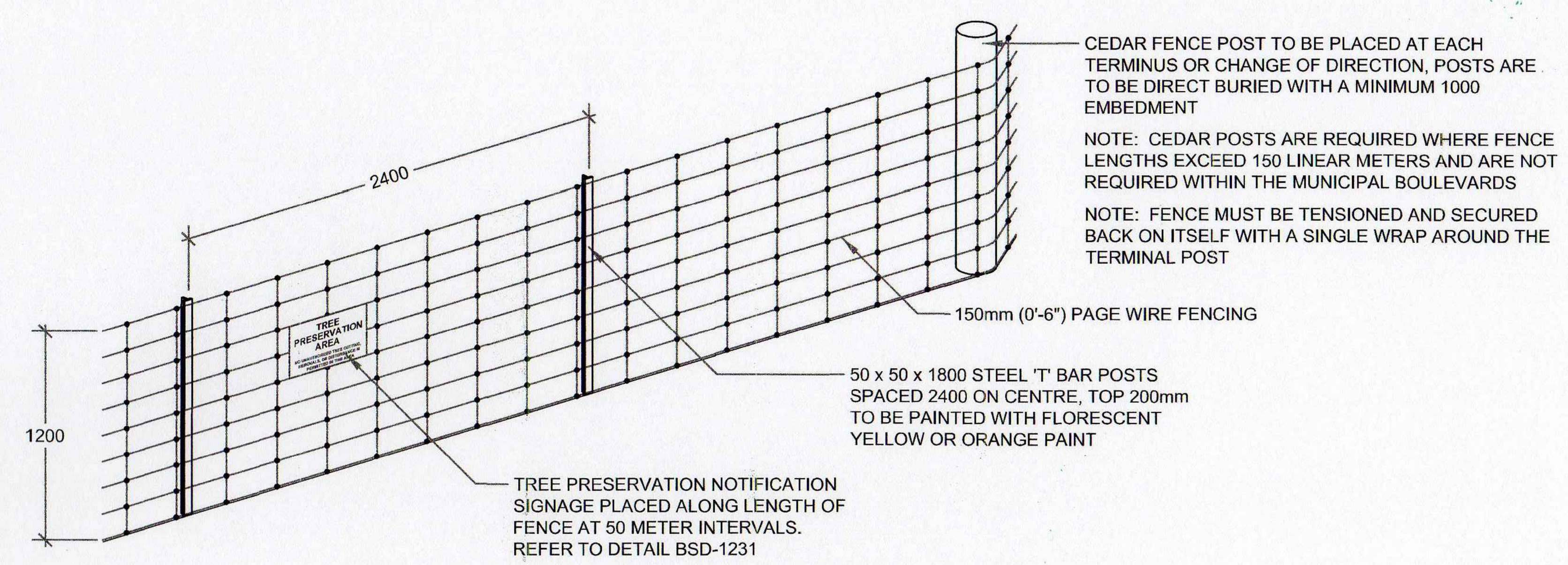

1. THIS DETAIL IS USED IN CONJUNCTION WITH BSD-1233 -SEDIMENTATION CONTROL FENCE.
2. PAGE WIRE FENCE TO BE ATTACHED TO CEDAR RAIL POSTS WITH 'U' SHAPED GALVANIZED NAILS ON EACH HORIZONTAL STRAND.
3. USE A MINIMUM OF FOUR (4) 100MM, 16 GAUGE GALVANIZED T-POST CLIPS TO ATTACH PAGE WIRE FENCE TO EACH 'T' BAR POST.
4. 'T' BARS ARE TO BE DRIVEN INTO THE GROUND TO A MINIMUM DEPTH OF 600mm.
5. ALL MEASUREMENTS ARE IN MILLIMETRES UNLESS OTHERWISE NOTED.
6. THIS DETAIL TO BE USED IN CONJUNCTION WITH BSD-1230, BSD-1231, BSD-1234 AND BSD-1235.

The City of BARRIE STANDARD DETAIL	TREE PRESERVATION FENCING	REV No. 1	DATE: JUNE 2015 / SCALE: N.T.S.	APPROVED DATE .... DIRECTOR OF ENGINEERING
		BSD-1232		

TREE PRESERVATION NOTES

1. THE INTENT OF THE TREE PRESERVATION PLAN IS TO PROVIDE PROTECTION AND PRESERVATION FOR EXISTING TREES ON THE SUBJECT PROPERTY. THEREFORE, ALL TREES ARE TO BE PRESERVED UNLESS OTHERWISE INDICATED IN THE PLAN OR THE ARBORIST'S REPORT. CONTACT THE LANDSCAPE ARCHITECT TO CONFIRM THE REMOVAL/RETENTION STATUS OF ANY TREES ON SITE, PRIOR TO CLEARING AND GRUBBING. THE OWNER WILL TAKE EVERY PRECAUTION TO PROTECT AND PRESERVE THE TREES APPROVED TO BE RETAINED IN ACCORDANCE WITH THE APPROVED PLANS.

2. PRIOR TO THE COMMENCEMENT OF ANY CLEARING, GRUBBING OR CONSTRUCTION WORKS, THE REQUIRED HOARDING WILL BE ERECTED 5M OUTSIDE OF THE OUTERMOST DRIPLINE OF ANY TREE TO BE RETAINED, IN ACCORDANCE WITH THE HOARDING DETAIL, AND TO THE SATISFACTION OF THE LANDSCAPE ARCHITECT. ERECTION OF ANY PROTECTION FENCING LESS THAN 5M SHALL BE UNDER THE DIRECTION OF THE LANDSCAPE ARCHITECT.

3. IT IS THE RESPONSIBILITY OF THE CONTRACTOR TO ERECT AND MAINTAIN ALL HOARDING AS PER THE APPROVED DETAIL, PRESERVATION NOTES AND LOCATIONS SHOWN ON THE DRAWINGS.

4.NO STORAGE OF EQUIPMENT OR VEHICLES, NOR ANY STOCKPILING OF MATERIAL IS TO OCCUR WITHIN THE AREA OF PRESERVATION/PROTECTION. TREES SLATED FOR PROTECTION WILL NOT BE USED FOR RIGGING OR WRAPPING. THE PROTECTION/PRESERVATION AREA SHALL NOT BE USED TO EMPTY CONTAMINANTS, REFUELING OR REPAIR OF VEHICLES OR EQUIPMENT.

5. TREES LOCATED ON THE IMMEDIATE EDGE OF THE CONSTRUCTION WORKS ARE TO BE PRUNED IN THE INTEREST OF SAFETY, IN ACCORDANCE WITH APPROVED ARBORICULTURAL PRACTICES.

6. TREE LOCATIONS ARE APPROXIMATE AND THEREFORE VERIFICATION ON SITE IS REQUIRED.

7. SHOULD A TREE REQUIRED TO BE PROTECTED BECOME DAMAGED OR REMOVED WITHOUT WRITTEN PERMISSION OF THE CITY OF BARRIE OR THE LANDSCAPE ARCHITECT, THE CONTRACTOR OR OWNER WILL BE RESPONSIBLE FOR REPLACEMENT OF THE TREE OF EQUAL CALIPER AND ACCEPTABLE TREE SPECIES AT THE DISCRETION AND SATISFACTION OF THE LANDSCAPE ARCHITECT.

8. THE WORK COMPLETED BY THE CONTRACTOR WILL NOT CAUSE OR EXACERBATE FLOODING CONDITIONS OR CAUSE SEDIMENT BUILDUP OVER THE ROOTZONE OF PROTECTED TREES. NO GRADING SHALL TAKE PLACE WITHIN THE TREE PRESERVATION AREA UNLESS OTHERWISE APPROVED BY THE LANDSCAPE ARCHITECT.

9. ANY REQUIRED LIMB TRIMMING SHALL BE UNDER THE DIRECT SUPERVISION OF THE LANDSCAPE ARCHITECT OR A QUALIFIED ARBORIST.

10. PRESERVATION FENCING TO BE INSTALLED IN ACCORDANCE WITH THE APPROVED DETAIL. FILTER FABRIC TO BE INSTALLED IN CONJUNCTION WITH THE APPROVED ENGINEERING DRAWINGS.

11. HOARDING/TREE PRESERVATION MAY BE COMPLETED IN CONJUNCTION WITH SEDIMENTATION CONTROL.

LANDMARK ENVIRONMENTAL GROUP LTD
Landscape Architects
Consulting Arborists
Urban Forestry

1. THE DRIP LINE IS MEASURED FROM THE OUTER MOST LIMIT OF BRANCHING WITHIN THE CROWN OF THE TREE. THE FURTHEST DISTANCE SHALL APPLY TO THE ENTIRE PERIMETER OF THE CROWN.
2. WHEN CONSTRUCTION AND/OR REMOVALS ARE LIMITED TO ONE SIDE OF A TREE AND/OR GROUP OF TREES THE LIMIT OF PRESERVATIONS SHALL BE DETERMINED BY THE DRIP LINE. IN THE EVENT THAT INDIVIDUAL TREES ARE BEING PRESERVED WHERE MORE THAN 1/3 OF THE ROOT ZONE WILL BE DISTURBED THE LIMIT OF PRESERVATION SALL BE 1.5 TO 2 TIMES THE LIMIT OF CANOPY OR AS DIRECTED BY THE CITY OF BARRIE.
3. PRESERVATION FENCING TO BE INSTALLED AS PER BSD-1232, THE APPLICATION OF FILTER FABRIC IS ONLY REQUIRED WHEN FENCING DOUBLES AS SILTATION CONTROL AS PER BSD-1233.
4. NOTICE OF REMOVAL SIGNAGE IS TO BE PLACED AT 50m INTERVALS AS PER BSD-1230.
5. THERE IS TO BE NO GRADING, CONSTRUCTION OF SWALES, CATCH BASINS OR OTHER DRAINAGE CONTROLS PLACED WITHIN THE LIMIT OF PRESERVATION.
6. WITHIN THE DEFINED LIMIT OF PRESERVATION THERE WILL BE:
   - NO CHANGE OF ALTERATION TO EXISTING GRADES
   - NO TRENCHING
   - NO REMOVAL OF UNDER STORY VEGETATION
   - NO ADDITION OF FILL OF EXCAVATIONS
   - NO STORAGE OF MATERIALS OR EQUIPMENT
   - NO DISPOSAL OF ANY LIQUIDS i.e. GAS, PAINT, OIL
   - NO INTRUSION BY VEHICLES OR EQUIPMENT
   - NO INTRUSION BY PEDESTRIANS
   - NO MANHOLES OR OTHER INFRASTRUCTURE INCLUDING UTILITIES.
7. THE LOCATION OF THE PROPERTY LIMIT IS NOT SHOWN IN THIS DETAIL AS IT IS NOT RELEVANT TO THE ESTABLISHMENT OF PRESERVATION LIMITS OR ASSOCIATED SETBACK REQUIREMENTS.

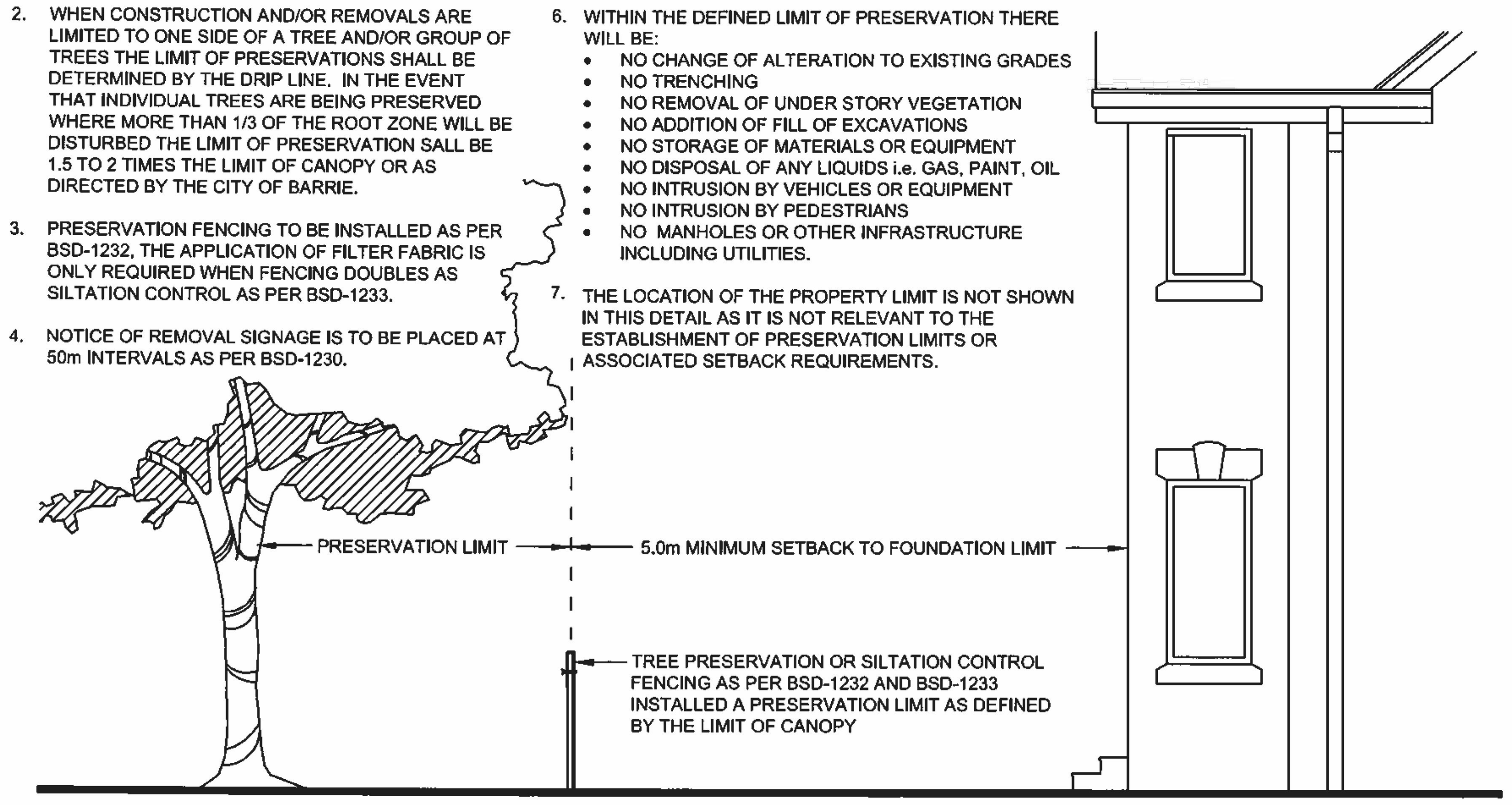

The City of BARRIE STANDARD DETAIL	LIMIT OF TREE PRESERVATION FOR DEVELOPMENT APPROVALS	REV No. 1	DATE: JUNE 2015 / SCALE: N.T.S.	APPROVED DATE June 11/15 ... DIRECTOR OF ENGINEERING
		BSD-1235 FORMERLY BSD-21A		

KEY PLAN NTS

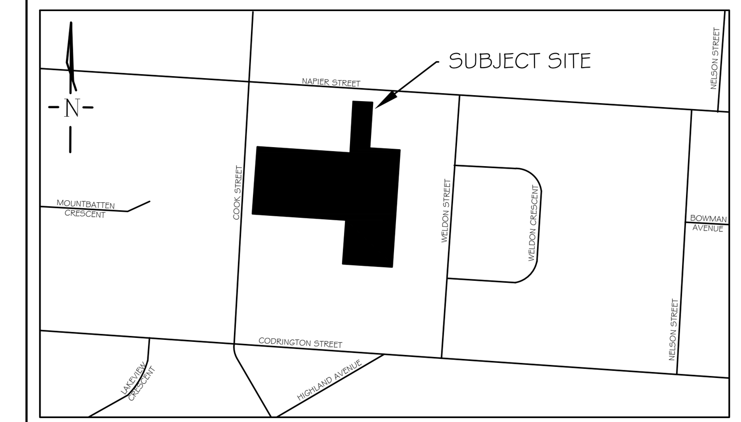

GENERAL NOTES

The Client and its contractors are responsible for all utility locates and confirming all setbacks, elevations, grades, etc. prior to installation of the constructed works.

The Contractor is to report any discrepancies in writing to the Landscape Architect prior to proceeding with the works to determine the impact and suitability of the proposed works. The Landscape Architect will not be responsible for any unapproved adjustments on site.

Construction of the works must conform to Authority requirements and applicable codes where they have jurisdiction.

All specifications and drawings are instruments of service and are the property and ownership of the Landmark Environmental Group Ltd. As such, the drawings shall not be modified or reproduced without the expressed written consent of Landmark Environmental Group Ltd. or they will be considered void. The said drawings are for Site Plan approval only and may require additional detailing prior to tender and construction.

The Landmark Environmental Group Ltd. is not liable for errors or omissions from the use of these drawings prior to approval, seal, signature and date, and will be considered void.

It is advised that the Contractor contact the Landscape Architect prior to commencement of the construction works to ensure that the Contractor has the latest approved drawings.

The Landmark Environmental Group Ltd. is not responsible for the accuracy of the base drawing information (eg Survey, Architectural, Engineering, etcO. If there are any discrepancies, the Contractor will refer to the appropriate base drawing information and report discrepancies on the Landscape Drawings to the Landscape Architect.

© Copyright Landmark Environmental Group Ltd, 2022.

LEGEND

NO	DATE	BY	REVISIONS
2	DEC 14-2022	R.T	DESIGN CONCEPT PLAN AS PER UPDATED SITE PLAN
1	NOV 17-2022	D.L	AS PER UPDATED SITE PLAN

STAMP

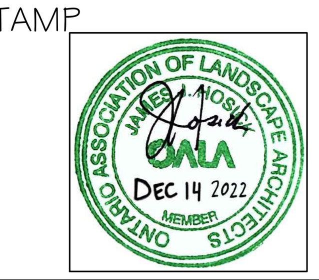

APPROVAL

LANDMARK ENVIRONMENTAL GROUP LTD
Landscape Architects
Consulting Arborists
Urban Forestry
LANDSCAPE ARCHITECTS & CONSULTING ARBORISTS
OFFICE: 705-796-1122
info@LEGroupLtd.com
www.LEGroupLtd.com

CLIENT: MK & COMPANY

PROJECT: 103 NAPIER STREET/95 COOK STREET, BARRIE RESIDENTIAL-INSTITUTIONAL DEVELOPMENT

DRAWING: LD-2: DETAILS

SCALE BAR:

PROJECT NO.: LA 602-21	SCALE: N.T.S
MUNICIPAL FILE NO.: D28-050-2021	DATE: JANUARY 11, 2022
DRAWN BY: D.L/R.T CHECKED BY: J.H	DRAWING No.: LD-2

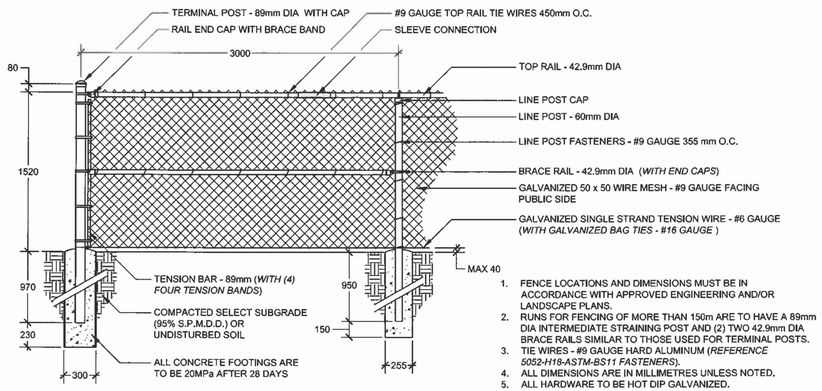

1. FENCE LOCATIONS AND DIMENSIONS MUST BE IN ACCORDANCE WITH APPROVED ENGINEERING AND/OR LANDSCAPE PLANS.
2. RUNS FOR FENCING OF MORE THAN 150m ARE TO HAVE A 89mm DIA INTERMEDIATE STRAINING POST AND (2) TWO 42.9mm DIA BRACE RAILS SIMILAR TO THOSE USED FOR TERMINAL POSTS.
3. TIE WIRES - #9 GAUGE HARD ALUMINUM (*REFERENCE 5052-H18-ASTM-BS11 FASTENERS*).
4. ALL DIMENSIONS ARE IN MILLIMETRES UNLESS NOTED.
5. ALL HARDWARE TO BE HOT DIP GALVANIZED.
6. NO GATES ARE PERMITTED FROM PROPERTY.
7. ONLY USE SCHEDULE 40 GALVANIZED PIPE.
8. FENCING TO BE INSTALLED SOLELY ON MUNICIPAL PROPERTY WITH AN INSET OF 150 TO FENCE CENTRE LINE.
9. THE TOP OF WIRE MESH SHALL BE KNUCKLED OVER SUCH THAT NO SHARP PROJECTIONS ARE VISIBLE OVER THE TOP RAIL..

The City of BARRIE STANDARD DETAIL	1.52m CHAIN LINK PARK FENCING	REV No. 1 / DATE: JUNE 2015 / SCALE: N.T.S. / BSD-1210 FORMERLY BSD-21	APPROVED DATE June 11/15 DIRECTOR OF ENGINEERING

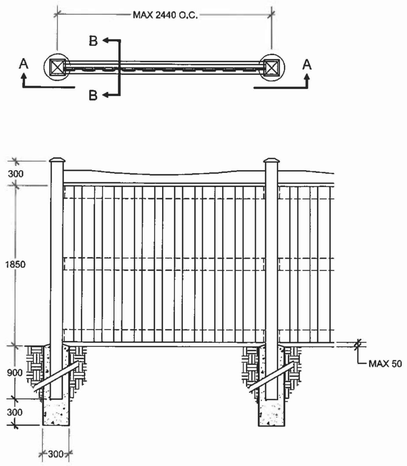

SECTION A-A

1. FENCE LOCATIONS AND DIMENSIONS MUST BE IN ACCORDANCE WITH APPROVED LANDSCAPE PLANS.
2. ALL WOOD TO BE SELECT, TIGHT KNOT GRADE AS PER THE NATIONAL LUMBER GRADES AUTHORITY.
3. ALL DIMENSIONS ARE IN MILLIMETRES UNLESS NOTED.
4. ALL HARDWARE TO BE HOT DIP GALVANIZED.
5. ALL LUMBER TO BE PRETREATED WITH AN APPROVED BROWN, MICRONIZED COPPER WOOD PRESERVATIVE OR APPROVED EQUIVALENT IN PLACE OF STAIN APPLICATION.

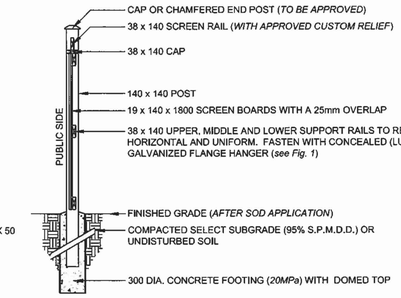

SECTION B-B

The City of BARRIE STANDARD DETAIL	NON-RESIDENTIAL TO RESIDENTIAL FENCE	REV No. 1 / DATE: JUNE 2015 / SCALE: N.T.S. / BSD-1208 FORMERLY BSD-19D	APPROVED DATE June 11/15 DIRECTOR OF ENGINEERING

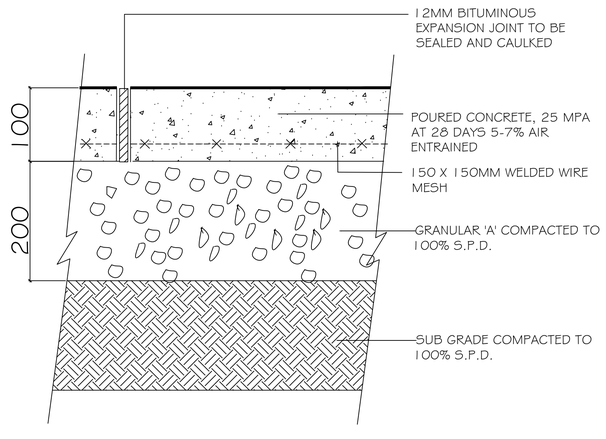

NOTES:

1 .DIMENSIONS IN MILLIMETRES

LANDMARK ENVIRONMENTAL GROUP LTD Landscape Architects Consulting Arborists Urban Forestry	CONCRETE PAD DETAIL	APR'D: J.H. / DRAWN: K.S.	DATE: JULY 13, '20 / SCALE: N.T.S.

SECTION VIEW

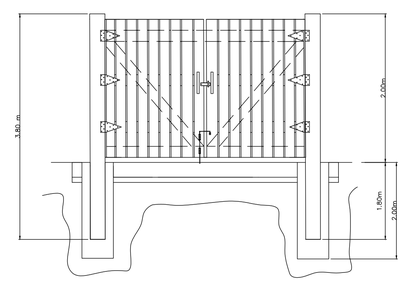

PLAN VIEW

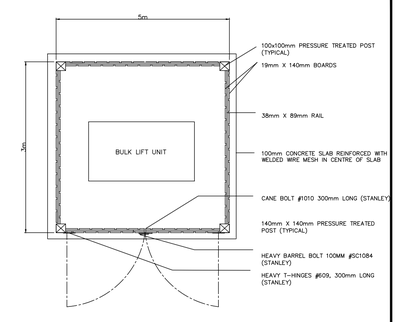

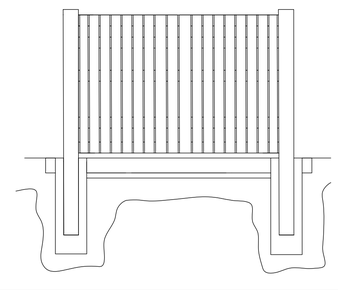

NOTES:
1. WOOD FINISH DARK BROWN-FLAT SOLID STAIN
2. PROVIDE CHAINS & HOOKS TO HOLD DOORS OPEN. ANCHOR TO BOTTOM
3. RAILS OF DOORS & FENCE
4. CONCRETE TO BE 35MPa COMPRESSIVE STRENGTH AT 28 DAYS WITH 5% TO 7% AIR ENTERTAINMENT WITH FIBER REINFORCING
5. EXPANSION JOINT EVERY 10m O.C.
6. CONTROL JOINT EVERY 5m O.C.
7. ALL DIMENSIONS ARE IN MILLIMETERS UNLESS NOTED OTHERWISE

LANDMARK ENVIRONMENTAL GROUP LTD Landscape Architects Consulting Arborists Urban Forestry	TYPICAL GARBAGE BIN ENCLOSURE (WOOD) NOT TO SCALE	REVIEWED: J.H. / DRAWN: N.H.	DATE: 16.11.15 / SCALE: N.T.S.

KEY PLAN NTS

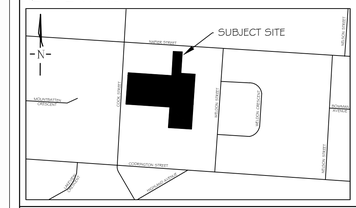

GENERAL NOTES

The Client and its contractors are responsible for all utility locates and confirming all setbacks, elevations, grades, etc. prior to installation of the constructed works.

The Contractor is to report any discrepancies in writing to the Landscape Architect prior to proceeding with the works to determine the impact and suitability of the proposed works. The Landscape Architect will not be responsible for any unapproved adjustments on site.

Construction of the works must conform to Authority requirements and applicable codes where they have jurisdiction.

All specifications and drawings are instruments of service and are the property and ownership of the Landmark Environmental Group Ltd. As such, the drawings shall not be modified or reproduced without the expressed written consent of Landmark Environmental Group Ltd. or they will be considered void. The said drawings are for Site Plan approval only and may require additional detailing prior to tender and construction.

The Landmark Environmental Group Ltd. is not liable for errors or omissions from the use of these drawings prior to approval, seal, signature and date, and will be considered void.

It is advised that the Contractor contact the Landscape Architect prior to commencement of the construction works to ensure that the Contractor has the latest approved drawings.

The Landmark Environmental Group Ltd. is not responsible for the accuracy of the base drawing information (eg Survey, Architectural, Engineering, etc0. If there are any discrepancies, the Contractor will refer to the appropriate base drawing information and report discrepancies on the Landscape Drawings to the Landscape Architect.

© Copyright Landmark Environmental Group Ltd, 2022.

LEGEND

NO	DATE	BY	REVISIONS
2	DEC 14-2022	R.T	DESIGN CONCEPT PLAN AS PER UPDATED SITE PLAN
1	NOV 17-2022	D.L	AS PER UPDATED SITE PLAN

STAMP

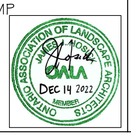

APPROVAL

LANDMARK ENVIRONMENTAL GROUP LTD
Landscape Architects Consulting Arborists Urban Forestry
LANDSCAPE ARCHITECTS & CONSULTING ARBORISTS
OFFICE: 705-796-1122
info@LEGroupLtd.com
www.LEGroupLtd.com

CLIENT:
MK & COMPANY

PROJECT:
103 NAPIER STREET/95 COOK STREET, BARRIE
RESIDENTIAL-INSTITUTIONAL DEVELOPMENT

DRAWING:
LD-3: DETAILS

SCALE BAR:

PROJECT NO.: LA 602-21	SCALE: N.T.S
MUNICIPAL FILE NO.: D28-050-2021	DATE: JANUARY 11, 2022
DRAWN BY: D.L/R.T / CHECKED BY: J.H	DRAWING No.: LD-3

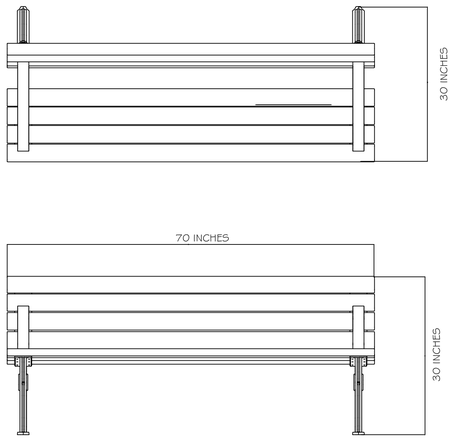

MATERIAL		LEVEL 1	DESCRIPTION bench
DATE April 18, 2002		UNITS: Inches	Presentation
MAGLIN FURNITURE SYSTEMS LTD.			MLB100A
113 Vinnet Steet Woodstock, Ontario Canada N4S 5Z8			
Telephone: 519 539-6776 Toll Free: 800-716-5506 Fax: 877-260-9393 E-Mail: sales@maglin.com Internet: www.maglin.com		SIZE A / BWG. NO.	REV. A
		SCALE 1:18 / CAD FILE MLB100A web CAD	SHEET 1 OF 1

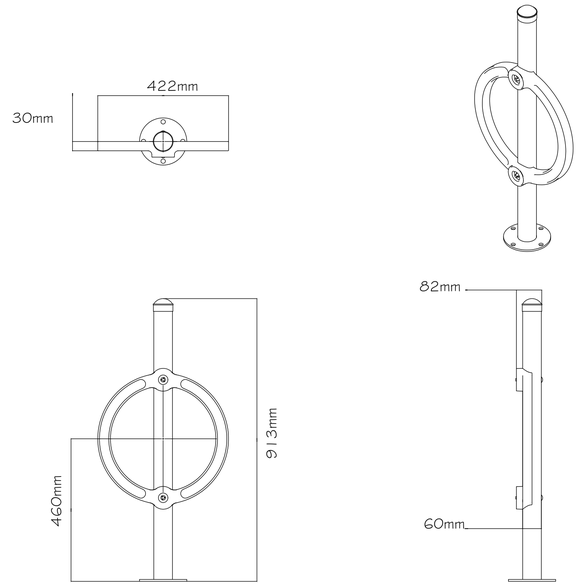

MAGLIN™ MAGLIN SITE FURNITURE INC.
WWW.MAGLIN.COM
TEL.: 800-716-5506
FAX: 877-260-9393

THE INFORMATION CONTAINED IN THIS DRAWING IS THE SOLE PROPERTY OF MAGLIN SITE FURNITURE INC. ANY REPRODUCTION IN PART OR AS A WHOLE WITHOUT THE WRITTEN PERMISSION OF MAGLIN SITE FURNITURE INC. IS PROHIBITED.

TITLE: BIKE RACK, 200, SURFACE MOUNT		
PART NO: MBR200-S		
SCALE (A): 1:12	WEIGHT: 18.45LBS	DATE: 2015-01-27

KEY PLAN NTS

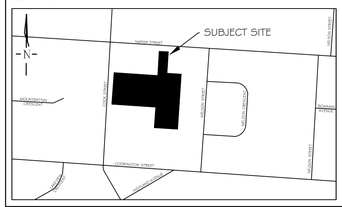

GENERAL NOTES

The Client and its contractors are responsible for all utility locates and confirming all setbacks, elevations, grades, etc. prior to installation of the constructed works.

The Contractor is to report any discrepancies in writing to the Landscape Architect prior to proceeding with the works to determine the impact and suitability of the proposed works. The Landscape Architect will not be responsible for any unapproved adjustments on site.

Construction of the works must conform to Authority requirements and applicable codes where they have jurisdiction.

All specifications and drawings are instruments of service and are the property and ownership of the Landmark Environmental Group Ltd. As such, the drawings shall not be modified or reproduced without the expressed written consent of Landmark Environmental Group Ltd. or they will be considered void. The said drawings are for Site Plan approval only and may require additional detailing prior to tender and construction.

The Landmark Environmental Group Ltd. is not liable for errors or omissions from the use of these drawings prior to approval, seal, signature and date, and will be considered void.

It is advised that the Contractor contact the Landscape Architect prior to commencement of the construction works to ensure that the Contractor has the latest approved drawings.

The Landmark Environmental Group Ltd. is not responsible for the accuracy of the base drawing information (eg Survey, Architectural, Engineering, etc0. If there are any discrepancies, the Contractor will refer to the appropriate base drawing information and report discrepancies on the Landscape Drawings to the Landscape Architect.

© Copyright Landmark Environmental Group Ltd, 2022.

LEGEND

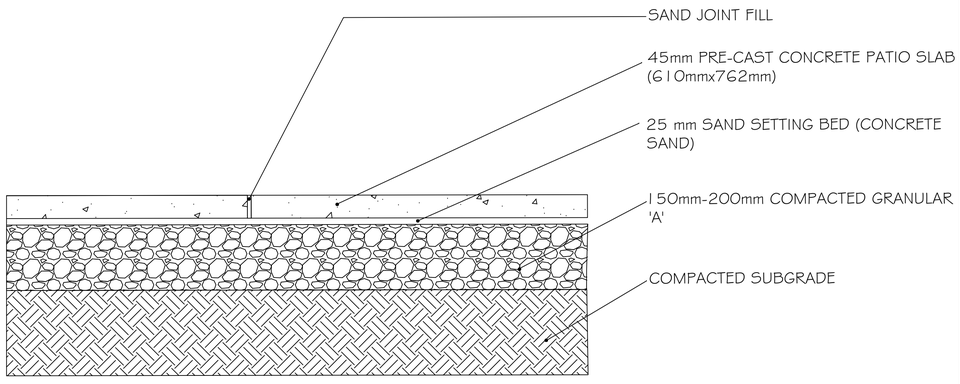

NOTES:

1. CONCRETE SLABS ARE TO BE SET 6mm HIGHER THAN ABUTTING SURFACES TO ALLOW FOR SETTLING.
2. ALL PATIO SLAB IS TO BE INSTALLED AS PER MANUFACTURER'S INSTRUCTIONS.
3. ALL FINAL MATERIAL SELECTIONS AND COLOUR CHOICES ARE TO BE APPROVED BY THE LANDSCAPE ARCHITECT PRIOR TO THE INSTALLATION OF ANY SLABS.

LANDMARK ENVIRONMENTAL GROUP LTD Landscape Architects Consulting Arborists Urban Forestry	PATIO SLAB INSTALLATION	
	APR'D: J.H.	DATE: MARCH 7 2019
	DRAWN: K.S.	SCALE: N.T.S.

NOTES:

1. FENCE LOCATIONS AND DIMENSIONS MUST BE IN ACCORDANCE WITH APPLICABLE NOISE STUDY AND MOE GUIDELINES (AS PER PUBLICATION LU-131 + ANNEXES)
2. ALL WOOD TO BE NATIONAL LUMBER GRADE ASSOC (N.L.G.A.) - SELECT TIGHT KNOT (S.T.K.) GRADE CEDAR.
3. STRUCTURAL DESIGN (FOOTINGS AND POSTS) MUST MEET DESIGN WIND PRESSURES PER ONTARIO BUILDING CODE.
4. ALL DIMENSIONS IN MILLIMETRES UNLESS NOTED
5. FINISH COLOUR TO BE APPROVED BY THE CITY OF BARRIE, AND MEETS LUMBER SUPPLIERS RECOMMENDED ASTM.
6. ALL HARDWARE TO BE HOT DIPPED GALVANIZED
7. ENSURE FENCING LAYOUT CONFORMS TO STREETSCAPE PLANS; INCLUDING DAYLIGHT TRIANGLES.

PLAN VIEW

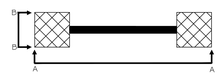

MIN 55mm x 130mm TONGUE AND GROOVE VERTICAL INFILL N.L.G.A. 13 (200) TO MEET MOE MIN DENSITY OF 20Kg/m

BOTTOM AND TOP OF FENCE TO REMAIN HORIZONTAL AND UNIFORM - FOR IRREGULAR GROUND AN OPTIONAL SKIRT RAIL MAY BE REQUIRED FOR MAX. 50mm GAP FROM FINISHED GRADE.

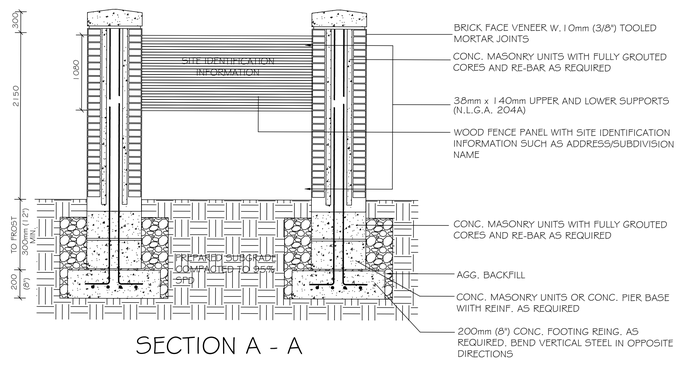

SECTION A - A

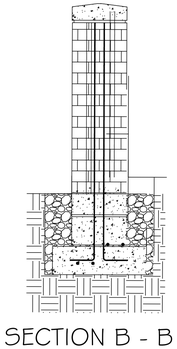

SECTION B - B

ENTRY WALL WITH SITE IDENTIFICATION PLAQUE
NOT TO SCALE

LANDMARK ENVIRONMENTAL GROUP LTD

NO.	DATE	BY	REVISIONS
2	DEC 14-2022	R.T	DESIGN CONCEPT PLAN AS PER UPDATED SITE PLAN
1	NOV 17-2022	D.L	AS PER UPDATED SITE PLAN

STAMP

APPROVAL

LANDMARK ENVIRONMENTAL GROUP LTD Landscape Architects Consulting Arborists Urban Forestry
LANDSCAPE ARCHITECTS & CONSULTING ARBORISTS
OFFICE: 705-796-1122
info@LEGroupLtd.com
www.LEGroupLtd.com

CLIENT: MK & COMPANY

PROJECT: 103 NAPIER STREET/95 COOK STREET, BARRIE RESIDENTIAL-INSTITUTIONAL DEVELOPMENT

DRAWING: LD-4: DETAILS

SCALE BAR:

PROJECT NO.: LA 602-21	SCALE: N.T.S
MUNICIPAL FILE NO.: D28-050-2021	DATE: JANUARY 11, 2022
DRAWN BY: D.L/R.T / CHECKED BY: J.H	DRAWING No.: LD-4