GEI Consultants

Consulting
Engineers and
Scientists

Geotechnical Investigation

Proposed Residential Development

159 Huronia Road, Barrie, Ontario

Submitted to:
N.J Electric General Contracting
182 Birkshire Drive
Aurora, Ontario
L4G 7R8

Submitted by:
GEI Consultants Ltd.
647 Welham Road, Unit 14
Barrie, Ontario, L4N 0B7
www.canada.geiconsultants.com

March 27, 2023
Project No. 2204000

Table of Contents

Figures

Appendices

1. Introduction

GEI Consultants (GEI) was retained by N.J. Electric General Contracting (the Client) to complete a geotechnical investigation and report for a proposed residential development at 159 Huronia Road, in the City of Barrie, Ontario. A site locations plan is enclosed as Figure 1.

A residential development is proposed for the property at 159 Huronia Road, Barrie Ontario. The property is rectangular in shape with a total site area of 0.14 hectares. The site is located in the northeast corner of the intersection of Huronia Road and Little Avenue. The property is currently occupied by one residential dwelling with a single level and a basement, which will be demolished prior to any development. The site lies within a Lake Simcoe Regional Conservation Authority (LSRCA) regulated area, with the southern portion of the site being identified as a “floodplain” and/or “floodplain setback”.

The proposed development includes a block of several townhomes with driveways directly connected to Huronia Road. Detailed grading plans are not yet available and details pertaining to the townhome design including the presence of basements (basement are assumed for purposes of this report), is not yet known. The property will be municipally serviced. An aerial image of the site is provided on Figure 2A, and the proposed concept plan is included as Figure 2B.

The purpose of the geotechnical investigation was to assess the subsurface soil conditions at the site, and based on this information, provide geotechnical engineering recommendations in support of the proposed development. This report summarizes the borehole findings, provides design geotechnical engineering recommendations regarding available bearing capacities for foundations, floor slabs, earth pressures and drainage for basements, site servicing and installation. Considerations for constructability such as soil excavation, compaction, on-site backfill suitability and temporary groundwater control are also provided.

It is noted that the recommendations provided in this report must be considered preliminary in nature due to the current uncertainty of the design for the project. As the design progresses further geotechnical review and input may be required which might necessitate the need for additional investigation and/or analysis.

GEI has also been retained to complete a hydrogeological study for the site and the findings and recommendations are provided under separate cover.

It is noted that geoenvironmental assessment, chemical testing, etc. was not part of the current scope. GEI would be please to revise the scope to include geoenvironmental aspects, if requested.

2. Procedures and Methodology

It is noted that all elevations in this report are metric and expressed in metres (m). All measurements are also in metric and expressed in millimetres (mm), metres (m) or kilometres (km).

Prior to the commencement of drilling activities, the borehole locations were staked in the field by GEI. Borehole ground surface elevations of the boreholes and coordinates (referencing NAD 83 geodetic datum) were surveyed by GEI with a Topcon FC – 5000 GPS Survey unit.

Underground utilities including natural gas, electrical, telephone, water, etc. were marked out by public utility locating companies and a private locator prior to drilling.

The fieldwork for the drilling program was carried out on November 22, 2022. Boreholes 1 to 3 were advanced to 6.6 m below existing grade (Elev. 234.2 to 235.4). Borehole logs are provided in Appendix A and the borehole locations are shown on Figure 2A (aerial image) and Figure 2B (proposed plan).

The boreholes were advanced by a drilling subcontractor retained and supervised by GEI using a track-mounted drill rig, solid stem augers, and standard soil sampling equipment. Sampling was conducted using a 51 mm O.D. Split Spoon (SS) sampler. Standard Penetration Test (SPT) “N” Values (N values) were recorded for the sampled intervals as the number of blows required to drive an SS sampler 305 mm into the soil using a 63.5 kg drop hammer falling 750 mm, in accordance with ASTM D1586. In each borehole soil sampling was conducted at 0.75 m intervals for the upper 3.0 m and at 1.5 m intervals thereafter.

Monitoring wells were installed in all the boreholes by GEI to facilitate long-term groundwater monitoring, each consisting of 50 mm diameter PVC pipe with a 1.5 m long screen and protective casing. Monitoring well construction is shown on the borehole logs in Appendix A.

The GEI field staff examined, and classified characteristics of the soils encountered in the boreholes, including the presence of fill materials (if any), groundwater observations during and upon completion of the drilling, recorded observations of borehole construction, and processed the recovered samples. All recovered soil samples were logged in the field, carefully packaged, and transported to GEI’s laboratory for more detailed examination and classification.

In GEI’s laboratory, the samples were classified as to their visual and textural characteristics. Four (4) representative samples of the major soil units were selected and submitted to our laboratory for grain size analysis. Grain size results are provided in Appendix B.

3. Subsurface Conditions

3.1 General Overview

The detailed soil profiles encountered in the boreholes are indicated on the attached borehole logs in Appendix A, and the geotechnical laboratory results are included in Appendix B. The borehole locations are shown on Figures 2A and 2B.

It should be noted that the conditions indicated on the borehole logs are for specific locations only and can vary between and beyond the locations. It should be noted that the soil boundaries indicated on the borehole logs are inferred from non-continuous sampling and observations during drilling. These boundaries are intended to reflect approximate transition zones and should not be interpreted as exact planes of geological change.

In addition, the descriptions provided in the borehole logs are inferred from a variety of factors, including visual observations of the soil samples retrieved, laboratory testing, measurements prior to and after drilling, and the drilling process itself (speed of drilling, shaking/grinding of the augers, etc.). The passage of time also may result in changes in conditions interpreted to exist at locations where sampling was conducted.

3.2 Stratigraphy

3.2.1 Topsoil

A surficial topsoil layer was at the ground surface in Boreholes 1, 2 and 3 ranging in thickness from 75 to 150 mm.

3.2.2 Fill

A fill layer was encountered in all boreholes. The fill layer typically consisted of sand/silty sand in the upper portion and gravelly sand in the bottom portion. The fill was penetrated at 2.3 to 3.0 m depth (Elev. 238.4 to 239.4). The fill had trace to some organics in all boreholes and concrete pieces were observed in Borehole 2. The fill was moist to wet with moisture contents ranging from 8 to 14%. The fill had N values ranging from 8 to 22 (loose to compact).

3.2.3 Silty Sand / Sand / Sandy Silt to Silty Sand

Cohesionless deposits were encountered beneath the fill, locally the clayey silt in Borehole 1. These deposits consisted of silty sand to sand in Borehole 1 from 3.0 to 6.6 m depth (Elev. 238.9 to 235.4), sandy silt to silty sand in Borehole 2 from 3.0 to 6.1 m depth (Elev. 238.7 to 235.6) and sand and gravel in Borehole 3 from 2.3 to 3.0 m depth (Elev. 238.4 to 237.7). The deposits had a till like appearance in Borehole 1 and 2. Three samples of the various units were submitted to our laboratory for grainsize analysis and the results are provided in Figure B1 in Appendix B. N values ranged from 4 to 35 being loose to dense, typically compact. The soil was typically wet with moisture contents ranging from 8 to 20%.

3.2.4 Clayey Silt / Clayey Silt to Silty Clay

A 400 mm thick clayey silt layer from 2.6 to 3.0 m depth (Elev 238.9 to 239.4) was observed below the fill and above the cohesionless soil in Borehole 1. In Boreholes 2 and 3, clayey silt and clayey silt to silty clay units were present at depths varying from 3.0 to 6.1 (Elev. 235.6 to 237.7) and extended to the 6.6 m depth of exploration (Elev. 234.2 to 235.2). A sample of the clayey silt to silty clay soil was submitted to our laboratory for grain size analsysis and the results are provided in Figure B2 in Appendix B. The soil was grey and moist to very moist with moisture contents ranging from 12 to 28%. N values in the material ranged from 16 to 32 blows indicating a very stiff to hard consistency.

3.3 Groundwater

Unstabilized groundwater level measurements and cave measurements were taken upon the completion of drilling of each borehole as shown on the borehole logs in Appendix A. These measurements were taken to provide a rough estimate of the possible excavation and temporary groundwater control constructability considerations that may arise. All three (3) boreholes were outfitted with a monitoring well with 50 mm diameter PVC standpipe and 1.5 m long screen. Monitoring well configuration and groundwater observations are noted on the borehole logs in Appendix A, and a summary is below.

Borehole	Depth of Cave (m) / Elev.	First Water Strike (m) / Elev	Unstabilized Groundwater Level Depth (m) / Elev.	Depth (m) / Elev. of Groundwater Table, December 6, 2022
1	5.4 / 236.5	2.3 / 239.6	2.3 / 239.6	2.6 / 239.3
2	Open (6.6 / 235.2)	2.3 / 239.4	2.1 / 239.6	2.3 / 239.4
3	Open (6.6 / 234.2)	1.5 / 239.2	2.1 / 238.6	2.4 / 238.3

The stabilized groundwater level was measured at 2.3 to 2.6 m (Elev. 238.3 to 239.4) below the existing ground surface.

The existing fill, sand, silty sand and sand and gravel are permeable and allow for the free flow of ground water when wet. The sandy silt to silty sand is semi-permeable and is expected to generally allow for the free flow of water when wet. The clayey silt and clayey silt to silty clay are generally not permeable.

Groundwater levels are expected to show seasonal fluctuations and vary in response to prevailing climate conditions.

4. Engineering Design Parameters & Analysis

The proposed development includes a block of several townhomes with driveways directly connected to Huronia Road. Detailed grading plans are not yet available and details pertaining to the townhome design including the presence of basements (basement are assumed), is not yet known. The property will be municipally serviced. An aerial image of the site is provided on Figure 2A, and the proposed concept plan is included as Figure 2B.

It is noted that the recommendations provided in this report must be considered preliminary in nature due to the current uncertainty of the design for the project. As the design progresses further geotechnical review and input may be required which might necessitate the need for additional investigation and/or analysis.

4.1 Site Grading

Grading plans were not available for review at the time of this report, however it is speculated that some grade raise is required to keep basements above the ground water level.

It is noted that the existing house on the site only has a partially buried basement with raised grades surrounding the buildings, likely to keep the basements above the groundwater.

The high groundwater level measured in the wells at the time of this report was at Elev. 239.4, about 2.3 m below existing grade. For purposes of this report, and subject to review with further groundwater level monitoring, the lowest basement level is recommended to be at Elev. 239.9, or above (minimum 0.5 m above the high ground water level). Based on this rationale and upon review of the boreholes, the footings would be founded in the fill. The existing fill is unsuitable to support the proposed townhouses due to concerns with settlement. As result removal of the existing fill is required followed by replacement with engineered fill to support the buildings and the servicing infrastructure. It is noted the existing fill thickness at the house may be deeper than indicated in the boreholes and all fill associated with the existing house will have to be removed vertically and laterally prior to engineered fill placement.

When grading is established, GEI should review the drawings for geotechnical requirements.

4.1.1 Engineered Fill

GEI defines “engineered fill” as material that will support foundations, and which is placed and compacted in a specified and controlled manner under full-time supervision of geotechnical engineering staff.

In any location where engineered fill will be placed to raise grades or replace poor/weak soil, the topsoil, vegetation, peat, or existing earth fill must be fully removed down to competent soil. The exposed subgrade soil must be proof-rolled and inspected by the geotechnical engineer to ensure all unsuitable material (e.g., organics, weak or soft soil, weathered / disturbed soil, deleterious materials, existing fill) is removed from the engineered fill footprint. Any unsuitable areas must be further sub-excavated and replaced with fill compacted to targeted 100% Standard Proctor maximum dry density (SPMDD), minimum 98% SPMDD in building areas and 95% SPMDD in road and servicing areas.

Once the subgrade is approved, engineered fill can be placed. Engineered fill must be placed under the full-time supervision of a geotechnical engineer as required in the Ontario Building Code. The engineered fill may consist of excavated on-site inorganic cohesionless soils provided they have been moisture conditioned to a moisture content within 2% of optimum moisture content and do not contain organics, topsoil or deleterious material. Due to the organics in the fill, it is speculated that most of the existing fill will not be suitable for reuse as engineered fill. It is recommended that any imported soil consist of Granular B (OPSS.MUNI 1010) and be first used in building areas, with suitable on-site soil used in landscaped or road areas. Select Subgrade Material (SSM) (OPSS.MUNI.1010) can be imported in areas other than building areas. Engineered fill must be placed in loose lifts of 200 mm or less and compacted as noted above.

The exposed subgrade will likely be wet. In wet subgrade areas, the first lift of engineered fill shall consist of 400 mm of Granular B Type II (OPSS.MUNI 1010). This will help to bridge the weaker subgrade and improve the ability to achieve the compaction specifications for subsequent engineered fill lifts.

The engineered fill must extend a minimum of 1 m out from all sides of the foundations and extend at a 1 horizontal to 1 vertical slope (1H:1V) down to the exposed subgrade. A typical detail for engineered fill pad dimensioning is included in Appendix C.

4.2 Foundation Design

Grading was not established at the time of this report, and it is speculated that a grade raise is required for the site to keep basements above the groundwater level. Footings will likely be founded on engineered fill.

4.2.1 Foundations on Engineered Fill

The foundations will likely be supported on an engineered fill pad, constructed as discussed in Section 4.1.1, and the spread or strip footings can be designed using a maximum of 150 kPa at Serviceability Limit State (SLS) and 225 kPa at Ultimate Limit State (ULS).

It is recommended that nominal reinforcing steel for stiffening of the foundation walls made on engineered fill be provided to help mitigate minor cracking due to minor differential settlement. The reinforcing steel in the poured concrete foundation walls may consist of 2-15M bars continuous at the top of the foundation wall, and 2-15M bars continuous at the bottom of the foundation walls. Typically, these bars are placed 100 to 200 mm from the top or bottom of the foundation wall, respectively. The reinforcing steel should extend a minimum of 3 m past any transition zones between engineered fill and native soil. A typical reinforcing steel detail for foundation walls placed on engineered fill is provided within Appendix C. The recommended nominal reinforcing steel should not be considered a structural design. The need for different or additional reinforcement should be reviewed by a structural engineer to ensure the original structural design intent of the structure is maintained.

Where the footings extend down to the native soil, the same bearing resistance as provided above for the engineered fill can be used on the native soil within 3 m of the existing ground surface.

4.2.2 General Foundation Considerations

All footings exposed to ambient air temperature throughout the year must be provided with a minimum of 1.2 m of earth cover or equivalent insulation for frost protection (25 mm of polystyrene insulation is equivalent to 300 mm of soil cover). The minimum strip and spread footing widths to be used shall be dictated as per the Ontario Building Code, regardless of loading considerations. Footings stepped from one level to another must be at a slope not exceeding 7V:10H.

The foundation design parameters provided above are predicated on the assumption that the foundation subgrade surface is undisturbed, and that all earth fill, deleterious, softened, disturbed, organic, and caved material is removed. The foundation excavation must be done in such a way that groundwater is controlled to prevent any disturbance to the foundation base. The groundwater table must be lowered at least 1 m below the founding elevation prior to excavation to prevent disturbance to the foundation subgrade from groundwater seepage.

The foundation subgrade must be reviewed prior to concrete placement to ensure the foundation design parameters provided are applicable, and to provide remedial recommendations if necessary. If the foundation excavation will be open for a prolonged period of time, the foundation subgrade should be protected with a skim coat of lean mix concrete (applied immediately after inspection by the geotechnical engineer), to ensure that no deterioration will occur due to weather effects.

4.3 Basement Wall Earth Pressure Design Parameters

Basement walls must be designed to resist unbalanced lateral earth pressures imparted from the weight of adjacent soils. Lateral earth pressures are calculated using the following equation:

$$\boldsymbol{P = K[\gamma h + q]}$$

where, **P** = the horizontal pressure at depth, **h** (m)
K = the earth pressure coefficient (dimensionless)
h = depth below surface in metres
γ = the bulk unit weight of soil, (kN/m^3)
q = surcharge loading (kPa)

The above equation assumes that a drainage system is present which prevents the build up of any hydrostatic pressure behind the structure subjected to the unbalanced lateral earth pressures. If this is not the case, the equation must be revised to also incorporate the submerged unit weight of the soil multiplied by the earth pressure coefficient, in addition to the water pressure itself.

The values for use in the design of basements subjected to unbalanced lateral earth pressures at this site are as follows:

Soil Type	γ – Bulk Unit Weight (kN/m^3)	φ – Friction Angle (degrees)	Earth Pressure Coefficient (dimensionless)		
			K_a – Active	K_o – At-Rest	K_p – Passive
Granular 'B' (OPSS.MUNI 1010)	21.0	32	0.31	0.47	3.25
Compact to Dense Native Cohesionless or Stiff to Very Stiff Clayey Silt	20.0	30	0.33	0.50	3.00

The calculation of the earth pressure coefficients is based on Rankine theory, which provides a conservative estimate as no friction between the soil and the structure is accounted for. The earth pressure coefficients provided above are only applicable for flat ground surfaces beyond the structure and will change for sloping ground surfaces.

The earth pressure coefficients referenced within the above table are a function of the friction angle of the adjacent soil, and both the degree and direction of movement of the structure subjected to unbalanced lateral earth pressures. For structures that are restrained at the top (such as basement walls), the at-rest earth pressure coefficient will apply. For structures that allow for 0.1 to 1% of movement away from the soil, the full active earth pressure coefficient will apply. For structures that allow for 1 to 10% of movement into the soil, the full passive earth pressure coefficient will apply. The percentage movement is based on the height of the structure.

Other types of structures such as shoring walls with multiple rows of tiebacks and soil nail walls are subject to different loading conditions and must be analyzed separately.

4.4 Floor Slabs

The native soils or engineered fill are suitable to support lightly loaded residential slabs. Topsoil, vegetation, organics, in-situ earth fill and other soil containing organics, excessive moisture, or deleterious materials are not suitable to support floor slabs.

The exposed subgrade must be proof-rolled and inspected by the geotechnical engineer. If any soft or weak subgrade areas are identified, or if there are areas containing excessive amounts of deleterious/organic material, they must be locally sub-excavated and backfilled with approved clean earth fill or imported granular material and compacted to a minimum of 98% SPMDD within 2% optimum moisture content.

All building floor slabs must be provided with a capillary moisture barrier and drainage layer. This is made by placing the concrete slab on a minimum 200 mm layer of 19 mm clear stone (OPSS.MUNI 1004) compacted by vibration to a dense state. The upper 50 mm of clear stone can be replaced with 19 mm crusher run limestone for a working surface. The clear stone and a cohesionless subgrade must be separated by a geotextile such as Terrafix 270R (or approved equivalent) to prevent the migration of fines into the clear stone layer which could result in loss of support for the slab. Alternatively, Granular A (OPSS.MUNI 1010) compacted to 100% SPMDD can be utilized without filter cloth.

4.5 Drainage

For any new structures that will be slab-on-grade with no basement levels, perimeter and under-slab drainage at the foundation level is not required, provided that the underside of the concrete slab is at least 200 mm above the prevailing grade of the site and the surrounding surfaces slope away from the building at a gradient of at least 2% to promote surface water run-off and to reduce groundwater infiltration adjacent to foundations. To minimize infiltration of surface water, the upper 150 mm of backfill should comprise relatively impervious/cohesive compacted soil material.

All basement foundation walls must be provided with damp-proofing provisions in conformance to the Ontario Building Code. Backfill along the foundation wall must consist of Granular ‘B’ Type I (OPSS.MUNI 1010) for a minimum lateral distance of 600 mm out from the foundation wall. Alternatively, if a filtered cellular drainage media is provided adjacent to the foundation wall, the backfill may consist of common earth fill. The surrounding surfaces slope away from the building at a gradient of at least 2 percent to promote surface water run-off and to reduce groundwater infiltration. To minimize infiltration of surface water, the upper 150 mm of backfill could comprise relatively impervious compacted soil material (e.g. clayey soil).

For buildings with basements, a perimeter drainage system must be installed that will remove any water that infiltrates into the building backfill, to ensure that any water does not infiltrate into the basement. The perimeter drains must consist of minimum 100 mm diameter perforated pipes wrapped in filter socks, sufficiently covered on all sides by 19 mm clear stone. Perimeter drains should be directed to the sump underneath the basement floor in solid pipes so as not to surcharge any underfloor drainage layer with water. Underfloor drainage is not required provided the basement floor slab is a minimum 1 m above the ground water level. Where basements are less than 1 m but more than 0.5 m above the groundwater level, perforated subfloor drainage pipe, spaced at 6 m centres, surrounded by 19 mm clear stone, surrounded by a geotextile such as Terrafix 270R (or approved equivalent), and trenched into the subgrade is recommended for each townhouse block. All sump pumps should be on emergency power for redundancy in case of a power outage. A typical basement drainage detail is included in Appendix C.

4.6 Site Servicing

It is expected that the proposed townhomes will be serviced with municipal water and sanitary sewers and that only service laterals will be required from Huronia Road. Inverts are assumed to extend as deep as 3 m below the existing grade for the purposes of this report.

4.6.1 Bedding

The type of material and depth of granular bedding below the pipe will, to some extent, depend on the method of construction used by the contractor. Pipe bedding for flexible pipes should follow the requirements in Ontario Provincial Standard Drawing 802.010 or applicable municipal standards. Pipe bedding for rigid pipes should follow the requirements in Ontario Provincial Standard Drawings 802.030 to 802.032 or applicable municipal standards.

A subgrade consisting of the native cohesionless soils or the engineered fill will provide adequate support for pipes with the bedding requirements as laid out in the above referenced OPS drawings. Where disturbance of the trench base has occurred from groundwater seepage, construction traffic, etc., or if in-situ fill is present at the invert level, the material should be sub-excavated and replaced with suitably compacted granular fill. If weak zones are encountered, additional bedding materials and differing construction practices may be required and should be determined during construction. Any zones of peat or organic soil should be subexcavated and replaced with approved earth fill or imported granular material compacted to 95% SPMDD. Details on temporary groundwater control are provided in Section 5.2.

Regardless of whether flexible or rigid pipes are implemented, granular bedding and cover material should consist of a well graded, free draining material, such as Granular "A" (OPSS.MUNI 1010). All granular bedding must be compacted to a minimum of 95% SPMDD.

4.6.2 Backfill

Excavated inorganic fill and native cohesionless soils may be re-used as backfill in trenches, provided they are moisture conditioned so that the moisture content is within 2% of optimum. Additional soil compaction details are provided in Section 5.3. The backfill should be compacted to a minimum of 95% SPMDD. In confined areas the layer thickness will have to be reduced to utilize smaller compaction equipment efficiently or by using granular material instead of locally sourced fill. Any backfill that is frozen, contains a high percentage of organic material (topsoil, peat, etc.) or moisture, or has otherwise unsuitable deleterious inclusion should not be used as backfill. The maximum cobble or boulder size should not exceed half of the loose lift thickness (i.e., all particles with a diameter greater than 100 mm should be removed).

Where trenches are within the traveled portions of a driveway, backfill within the frost penetration depth of 1.2 m should consist of native, non-organic, excavated material consistent with the soils surrounding the trench. If this technique is not undertaken, then frequently problems arise with yearly differential frost heave movements between the trench backfill and the adjacent native soil. This would occur, for example, if imported granular material is used to backfill trenches which is less susceptible to frost effects compared to the native soils on site with a higher silt content (silt is highly frost-susceptible). Alternatively, if different soil is used as the backfill due to issues with achieving compaction, a frost taper of 10H:1V can be implemented to help mitigate the potential for differential settlement and frost heave.

5. Constructability Considerations

5.1 Excavations

At this time, excavations for the project site are anticipated to extend 2.5 to 3.5 m below existing grade to account for engineered fill placement and service connections, possibly basements. Below the surficial topsoil, excavations are anticipated to encounter earth fill, over the cohesionless soil units and locally the clayey silt/ silty clay to clayey silt unit. Harder digging can be expected locally in the dense cohesionless deposits. Cobbles and boulders should be expected in the sand and gravel deposit.

Excavations must be carried out in accordance with the Occupational Health and Safety Act, Ontario Regulation 213/91 (as amended), Construction Projects, Part III - Excavations, Section 222 through 242. Where workers must enter a trench or excavation the soil must be suitably sloped and/or braced in accordance with the OHSA. These regulations designate four (4) broad classifications of soils to stipulate appropriate measures for excavation safety. If more than one soil type is encountered in an excavation, the most conservative soil type must be followed for sloping the sidewalls of the excavation. Excavations for the site should be completed considering a Type 3 soil geometry, 1H:1V from the base of the excavation, assuming that the soils are dewatered prior to excavation.

Excavation sidewalls will need to be continuously reviewed for evidence of instability and ground water seepage, particularly following periods of heavy rain or thawing. When required, remedial action must be taken to ensure the continued stability of excavation slopes and the safety of the workers.

Minimum support system requirements for steeper excavations are stipulated in Sections 235 through 238 and 241 of the OHSA and include provisions for timbering, shoring and moveable trench boxes. To reduce the potential for instability of the trench excavations, materials excavated from the service trenches and/or other fill materials or heavy equipment should not be placed near the crest of the trench excavations.

It is important to note that soils encountered in the construction excavations may vary significantly across the site. Our preliminary soil classifications are based solely on the materials encountered in the boreholes advanced on site. The contractor should verify that similar conditions exist throughout the proposed area of excavation. If different subsurface conditions are encountered at the time of construction, we recommend that GEI be contacted immediately to evaluate the conditions encountered.

5.2 Temporary Construction Groundwater Control

As noted above, excavation is envisioned to extend to about 2.5 to 3.5 m below existing grade for the project.

The stabilized groundwater level was measured at 2.3 to 2.6 m (Elev. 238.3 to 239.4) below the existing ground surface. For excavation as described above the excavation will extend to the ground water level to about 1.0 m below the ground water level.

The exact scenario where certain groundwater control techniques will work are directly correlated to how coarse/fine the native soils are in an excavation, and both the lateral and vertical extent of the wet cohesionless deposits encountered as noted above. If the groundwater table is not controlled during construction, the base of the excavations will be unstable, leading to difficulties in excavating and placement of pipes, footings or engineered fill, and providing safety for the workers. Conventional sump pumping should be sufficient to control ground water seepage for excavation to the ground water level. Multiple pumps or sumps created with a corrugated steel pipe filled with gravel, will be required to control the ground water where excavation extended below the ground water level, considering the highly permeable cohesionless soils. Dewatering through vacuum wells may also be required.

It is recommended to carry out the work during the dry time of the year when the ground water table is lowest, to mitigate groundwater control measures. Also reducing the size of the excavation that is open at any one time will aid in reducing groundwater control requirements.

Based on the above, a Permit-to-Take-Water (PTTW) is not anticipated, however registry on the Environmental Activity and Sector Registry (EASR) system is likely required for multiple excavations or deep excavations and may be a prudent, to allow for areas of greater groundwater seepage with no work stoppage.

GEI's hydrogeological study under a separate cover provides further details regarding water taking analysis, regulatory requirements, impact assessments, monitoring plans, etc. for the site and must be referenced for groundwater control considerations.

5.3 Compaction Specifications

Standard Proctor Maximum Dry Density the specification to indicate the degree to which soil or aggregate is compacted. To achieve the specified SPMDD as indicated in this report, all soils or aggregates must be placed in lift thicknesses no greater than 200 mm. If this is not the case, only the upper portion of the lift will be adequately compacted, and the lower portion of the lift has a high probability of not meeting compaction specifications. In addition, industry standard equipment used to determine the degree of compaction consists of nuclear densometers. These devices have an inherent limitation in that they cannot test beyond

300 mm in depth, and so the degree of compaction beyond this depth cannot be quantitatively determined.

Along with lift thickness, ensuring that the soil or aggregate is within 2% of its optimum moisture content ensures that the specified compaction can be reached. If the soil or aggregate is too dry/wet, it is either very difficult or impossible to reach the specified compaction. This is especially true for when higher compaction specifications such as 98% and 100% SPMDD are required.

Moisture can be increased by adding water and mixing the soil prior to re-use, blending the soil with wetter material, or by importing soil to the site that is at optimum and can be readily compacted.

Moisture can be reduced by tilling or spreading out the soil to dry or blending it with drier material. In-situ moisture contents can change based on the season and local groundwater levels and can also change for stockpiled material due to precipitation. Zones of the fine-grained soil with very high moisture contents may fine moisture conditioning to be difficult to accomplish.

In addition to the above compaction specifications, in any areas where compacted fill will be placed over the exposed native soil subgrade, any loose, soft, wet, organic or unstable areas should be sub-excavated, and backfilled with clean earth fill or Granular ‘B’ (OPSS.MUNI 1010) compacted to a minimum of 95% SPMDD. This recommendation applies to site servicing and pavement subgrades. Where structures/buildings require upfilling beneath the structure the fill should be compacted to 100% SPMDD.

5.4 Quality Verification Services

On-site quality verification services are an integral part of the geotechnical design function, and for foundations, engineered fill and retaining walls, are required under the Ontario Building Code. Quality verification services are used to confirm that construction is being conducted in general conformance with the requirements as outlined in the drawings, reports and specifications prepared for the proposed development.

GEI Consultants can provide all the on-site quality verification services outlined below:

- The subgrade for shallow foundations for single-lot residential buildings may be field reviewed by the geotechnical engineer as required by the municipal regulating authority. The subgrade for shallow foundations for commercial buildings, retirement homes, or apartment buildings must be reviewed by the geotechnical engineer.

- Installation of retaining structures over 1.0 m high and related backfilling operations must be field reviewed on a continuous basis by the geotechnical engineer as required in the OBC.
- Full-time monitoring, testing and inspection of engineered fill placement is required by the geotechnical engineer per the OBC.
- Part-time monitoring of the subgrade support capabilities, material quality, lift thickness, moisture content, degree of compaction, etc. is recommended for the following areas to ensure the recommendations within this report are followed and they perform adequately in the long-term;
    - Slab-on-grades;
    - Pavement structure (granular and asphalt); and
    - Bedding/backfilling of site servicing.
- Testing of the concrete (compressive strength, slump, air content, etc.) and testing of the asphalt (asphalt content and gradation) are recommended to ensure that the quality of the materials being brought to site meet the requirements of the project.

6. Limitations and Conclusions

6.1 Limitations

The recommendations and comments provided are necessarily on-going as new information of underground conditions becomes available. More specific information with respect to the conditions between samples, or the lateral and vertical extent of materials may become apparent during excavation operations. The interpretation of the borehole information must, therefore, be validated during excavation operations. Consequently, conditions not observed during this investigation may become apparent. Should this occur, GEI should be contacted to assess the situation and additional testing and reporting may be required.

GEI should be retained for a general review of the final design drawings and specifications to verify that this report has been properly interpreted and implemented. If not accorded the privilege of making this review, GEI will assume no responsibility for interpretation of the recommendations in the report.

The comments given in this report are intended only for the guidance of the design engineers. The number of boreholes required to determine the localized underground conditions between boreholes affecting construction costs, techniques, sequencing, equipment, scheduling, etc. could be greater than has been carried out for design purposes. Contractors bidding on or undertaking the works should, in this light, decide on their own investigations, as well as their own interpretations of the factual borehole results, so that they may draw their own conclusions as to how the subsurface conditions may affect them.

This report was authorized by, and prepared by GEI for, the account of N.J. Electric General Contracting (as provided in the signed Standard Professional Services Agreement). Any use which a third party makes of this report, or any reliance on or decisions to be made based on it, are the responsibility of such third parties. GEI accepts no responsibility for damages, if any, suffered by any third party as a result of decisions made or actions based on this project.

6.2 Conclusion

It is recognized that municipal/regional governing bodies, in their capacity as the planning and building authority under Provincial statues, will make use of and rely upon this report, cognizant of the limitations thereof, both as are expressed and implied.

We trust this report is complete within our terms of reference, and the information presented is sufficient for your present purposes. If you have any questions, or when we may be of further assistance, please do not hesitate to contact our office.

Yours Truly,

GEI Consultants

Prepared By:

Mohd Razeen

Mohammed Razeen
Geotechnical E.I.T.

Reviewed By:

LICENSED PROFESSIONAL ENGINEER
G.R. WHITE
Mar. 27, 2023
PROVINCE OF ONTARIO

Geoffrey R. White, P.Eng.
Geotechnical Practice Lead

Figures

Site Location Plan

Borehole Location Plans

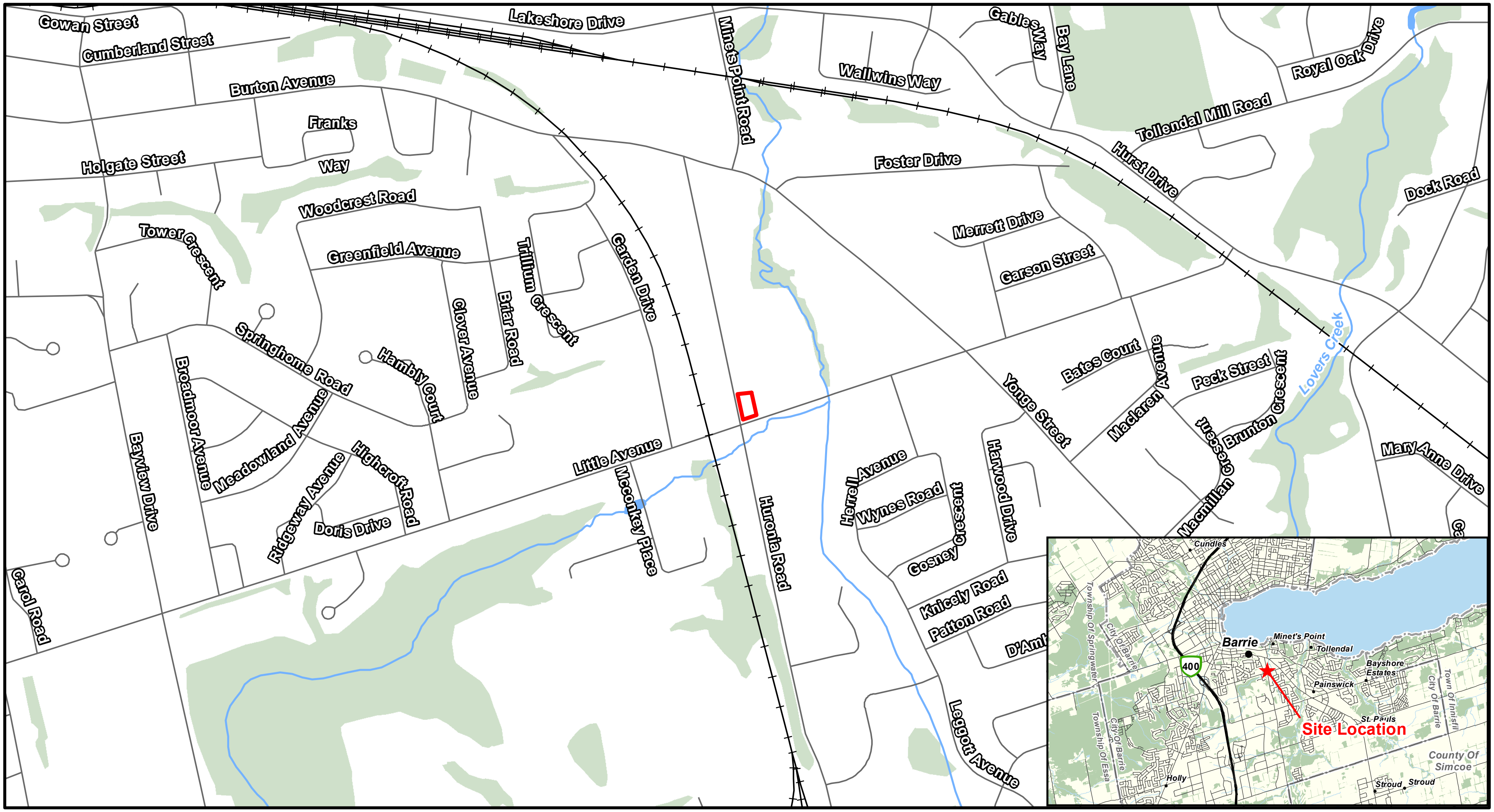

Legend

🟥 Site Location

—+— Railway

—— Road

—— Watercourse

🟦 Waterbody

🟩 Wooded Area

NOTES:

1. Coordinate System: NAD 1983 UTM Zone 17N.
2. Base features produced under license with the Ontario Ministry of Natural Resources and Forestry © Queen's Printer for Ontario 2022.

0 150 300 m

1:12,000

N

Proposed Residential Development
159 Huronia Road,
Barrie, ON

Innovative Planning Solutions

GEI Consultants

Project 2204000

SITE LOCATION PLAN

March 2023

Fig. 1

Legend

☐ Site Location

● Approximate Borehole/Monitoring Well Location

NOTES:
1. Coordinate System: NAD 1983 UTM Zone 17N.
3. Orthoimagery © First Base Solutions, 2022.
Imagery taken in 2021.

0 6 12 m
1:500

N

Proposed Residential Development
159 Huronia Road,
Barrie, ON

Innovative Planning Solutions

GEI Consultants

Project 2204000

BOREHOLE LOCATION PLAN
(AERIAL)

March 2023

Fig. 2A

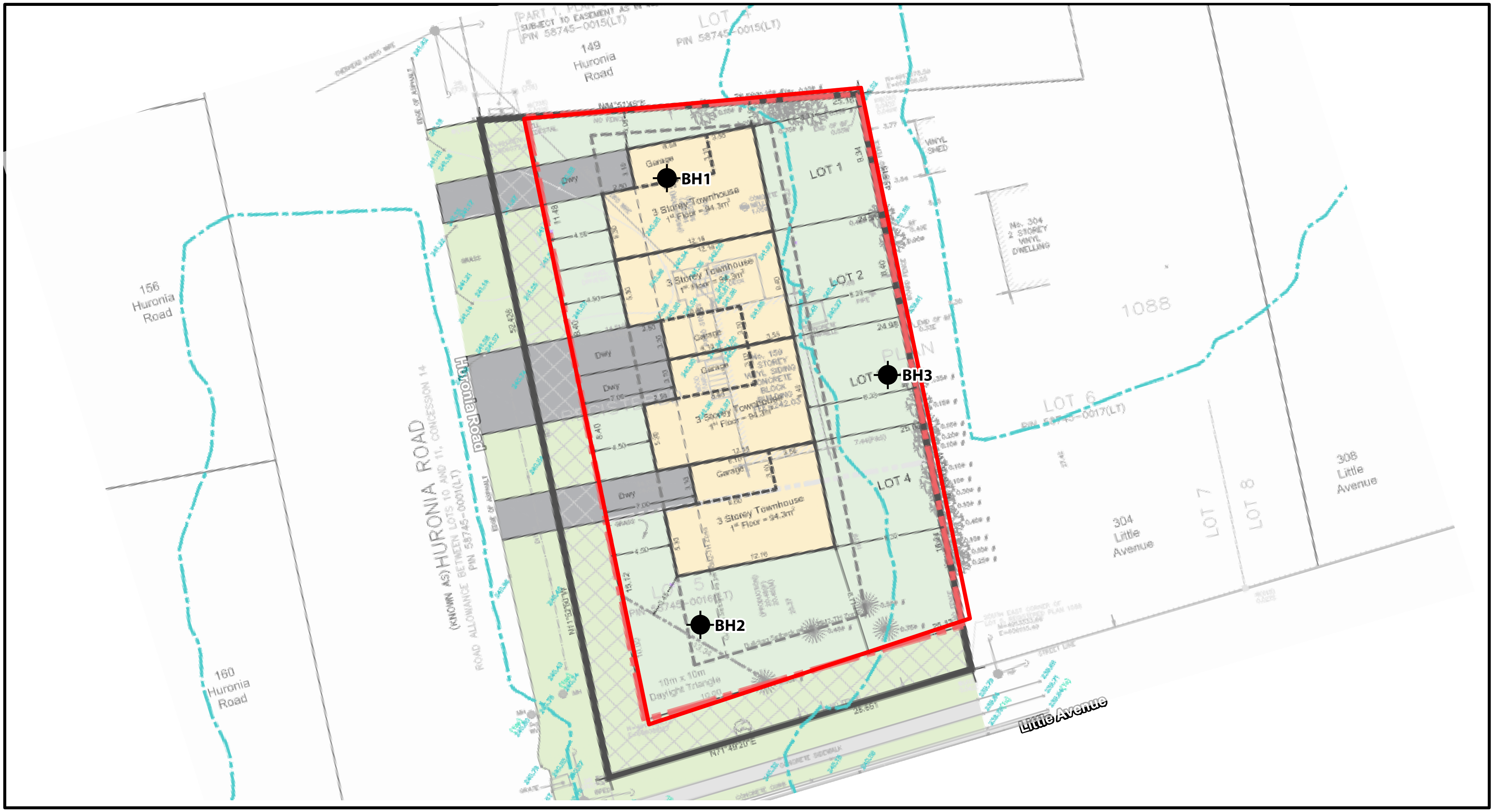

Legend

🟥 Site Location

⌖ Approximate Borehole/Monitoring Well Location

NOTES:
1. Coordinate System: NAD 1983 UTM Zone 17N.
3.'Conceptual Site Plan', Innovative Planning Solutions,(Feb., 23, 2023).

0 6 12
m
1:500

N

Proposed Residential Development
159 Huronia Road,
Barrie, ON

Innovative Planning Solutions

GEI Consultants

Project 2204000

BOREHOLE LOCATION PLAN
(CONCEPT PLAN)

March 2023

Fig. 2B

Appendix A

Borehole Logs

RECORD OF BOREHOLE No. 1

GEI Consultants

Project Number: **2204000**

Project Client: **Innovative Planning Solutions**

Project Name: **Proposed Residential Development**

Project Location: **Barrie, ON**

Drilling Location: **See Borehole Location Plan**

Local Benchmark:

Drilling Method: **Solid Stem Augers**

Drilling Machine: **Track Mount**

Logged By: **BH**

Reviewed By: **GW**

Northing: **4913371.3**

Easting: **606089.7**

Date Started: **Nov 22/22**

Date Completed: **Nov 22/22**

LITHOLOGY PROFILE

Depth (m)	Elevation (m) Geodetic	DESCRIPTION
0.1	241.8	TOPSOIL: 100 mm
2.6	239.4	FILL: Sand, some gravel, trace silt, compact, brown, moist - - - Trace organics - - - - - - Moist to wet - - -
3.0	238.9	CLAYEY SILT: Some sand, stiff, grey, moist
4.6	237.4	SILTY SAND: Trace gravel, trace clay, till-like, compact, brown, wet
6.6	235.4	SAND: Trace gravel, trace clay, trace silt, loose, brown, wet - - - Compact - - -
		Borehole Terminated at 6.6 m

SOIL SAMPLING

Sample Type	Sample Number	Recovery (%)	SPT "N" Value	Water Content (%)	COMMENTS & GRAIN SIZE DISTRIBUTION (%) GR	SA	SI	CL
AS	1			8				
SS	2	100	11	12				
SS	3	100	14	12				
SS	4	100	12	12	First water strike SS4			
SS	5	100	16	14	7	52	32	9
SS	6	100	4	19				
SS	7	100	17	20				

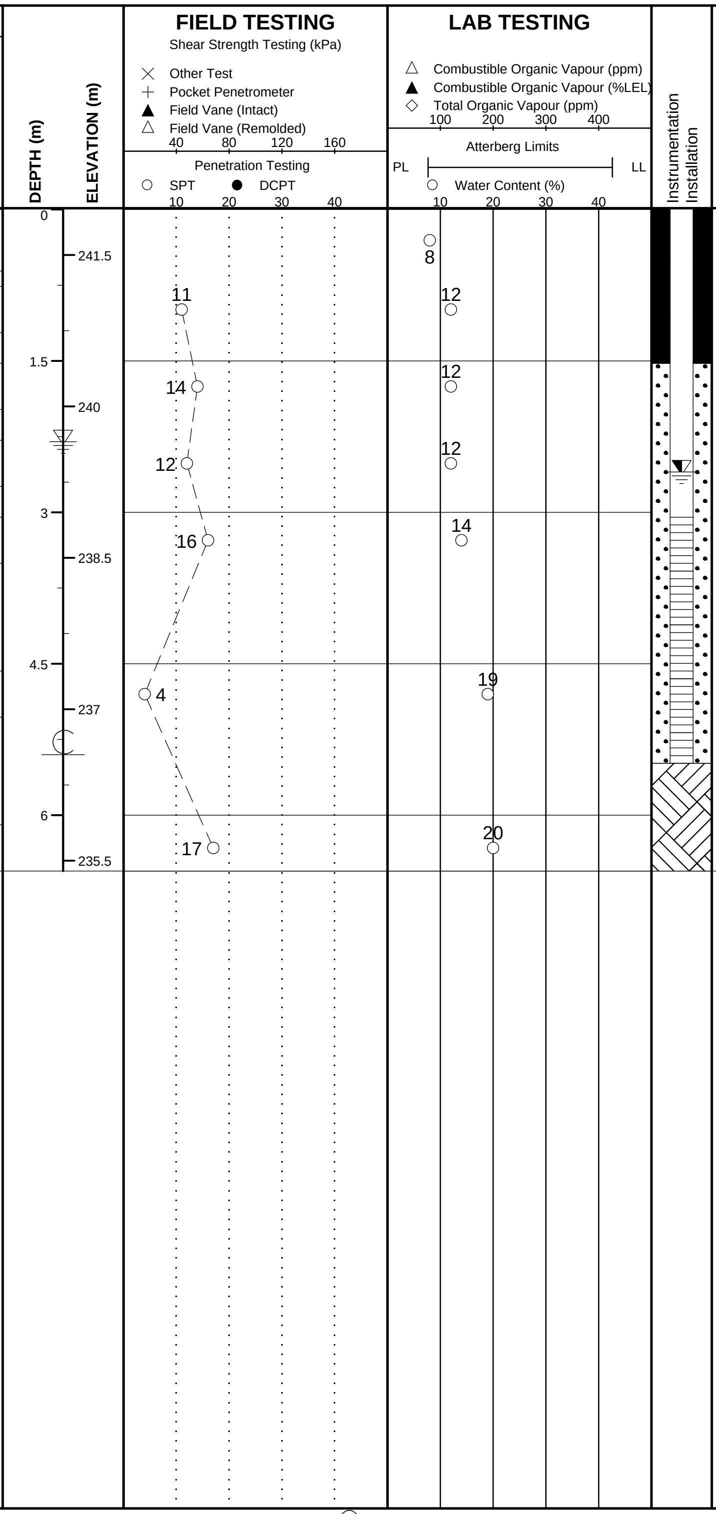

GEI CONSULTANTS
647 Welham Road, Unit 14
Barrie, Ontario L4N 0B7
T : (705) 719-7994
www.geiconsultants.com

Groundwater depth encountered on completion of drilling: 2.3 m.

Cave depth after auger removal: 5.4 m.

Groundwater depth observed on: Dec 6/22 at depth of: 2.6 m.

Groundwater Elevation: 239.3 m

Borehole details presented do not constitute a thorough understanding of all potential conditions present and require interpretative assistance from a qualified geotechnical engineer. Also, borehole information should be read in conjunction with the geotechnical report for which it was commissioned and the accompanying 'Explanation of Boring Log'.

Scale: **1 :75**

Page: **1 of 1**

RECORD OF BOREHOLE No. 2

Project Number: **2204000**
Project Client: **Innovative Planning Solutions**
Project Name: **Proposed Residential Development**
Project Location: **Barrie, ON**
Drilling Location: **See Borehole Location Plan**
Local Benchmark:

Drilling Method: **Solid Stem Augers**
Drilling Machine: **Track Mount**
Logged By: **BH**
Reviewed By: **GW**
Northing: **4913333.4**
Easting: **606092.5**
Date Started: **Nov 22/22**
Date Completed: **Nov 22/22**

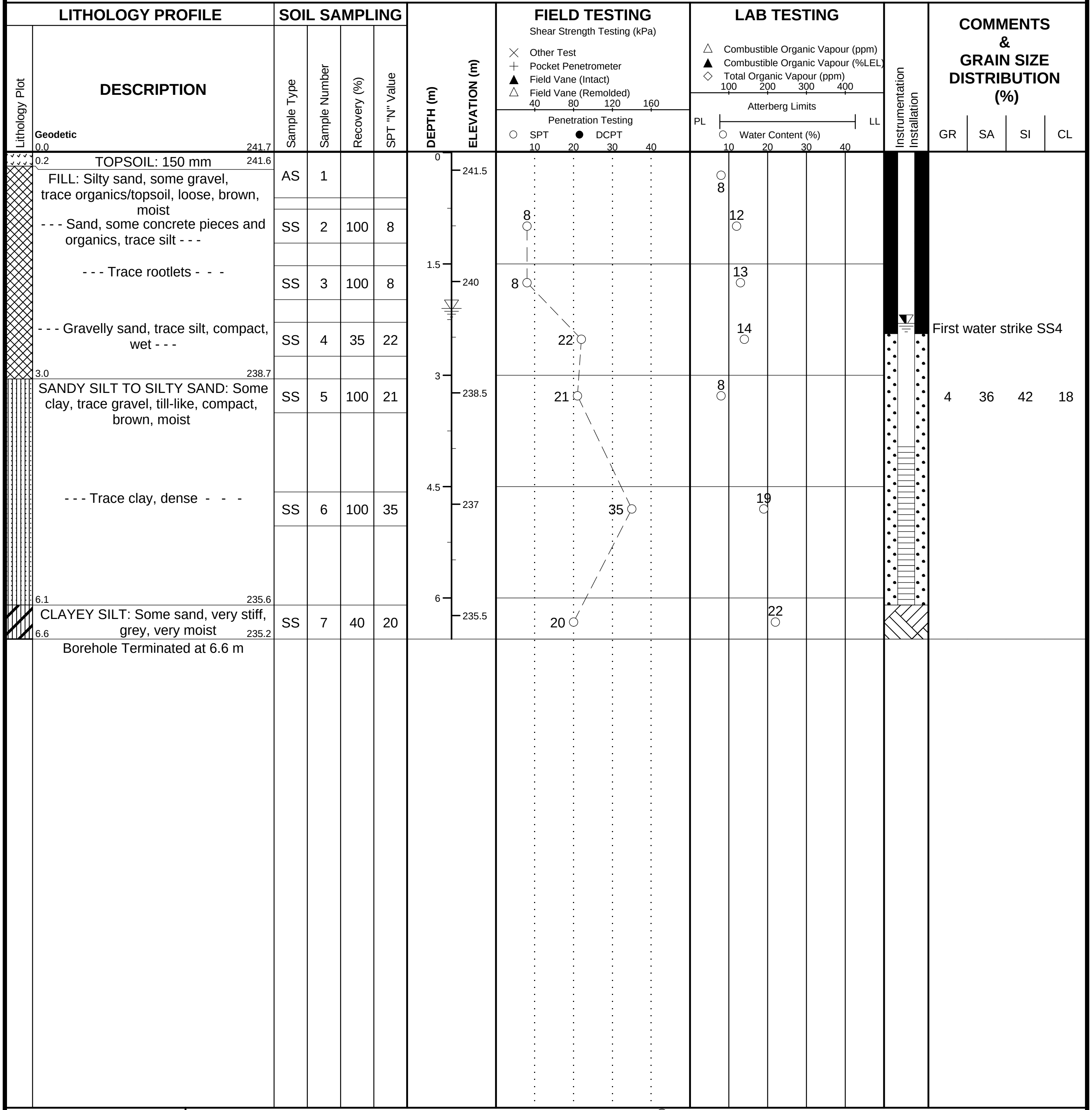

Depth (m)	Geodetic Elev. (m)	DESCRIPTION	Sample Type	Sample Number	Recovery (%)	SPT "N" Value	Water Content (%)	COMMENTS & GRAIN SIZE DISTRIBUTION (%)
0.0	241.7							
0.2	241.6	TOPSOIL: 150 mm						
		FILL: Silty sand, some gravel, trace organics/topsoil, loose, brown, moist	AS	1			8	
		- - - Sand, some concrete pieces and organics, trace silt - - -	SS	2	100	8	12	
		- - - Trace rootlets - - -	SS	3	100	8	13	
		- - - Gravelly sand, trace silt, compact, wet - - -	SS	4	35	22	14	First water strike SS4
3.0	238.7	SANDY SILT TO SILTY SAND: Some clay, trace gravel, till-like, compact, brown, moist	SS	5	100	21	8	GR 4, SA 36, SI 42, CL 18
		- - - Trace clay, dense - - -	SS	6	100	35	19	
6.1	235.6	CLAYEY SILT: Some sand, very stiff, grey, very moist	SS	7	40	20	22	
6.6	235.2	Borehole Terminated at 6.6 m						

Groundwater depth encountered on completion of drilling: 2.1 m.
Cave depth after auger removal: Open
Groundwater depth observed on: Dec 6/22 at depth of: 2.3 m.
Groundwater Elevation: 239.4 m

GEI CONSULTANTS
647 Welham Road, Unit 14
Barrie, Ontario L4N 0B7
T : (705) 719-7994
www.geiconsultants.com

Borehole details presented do not constitute a thorough understanding of all potential conditions present and require interpretative assistance from a qualified geotechnical engineer. Also, borehole information should be read in conjunction with the geotechnical report for which it was commissioned and the accompanying 'Explanation of Boring Log'.

Scale: **1 :75**
Page: **1 of 1**

RECORD OF BOREHOLE No. 3

Project Number: **2204000**
Project Client: **Innovative Planning Solutions**
Project Name: **Proposed Residential Development**
Project Location: **Barrie, ON**
Drilling Location: **See Borehole Location Plan**
Local Benchmark:

Drilling Method: **Solid Stem Augers**
Drilling Machine: **Track Mount**
Logged By: **.**
Reviewed By: **GW**
Northing: **4913354.6**
Easting: **606108.4**
Date Started: **Nov 22/22**
Date Completed: **Nov 22/22**

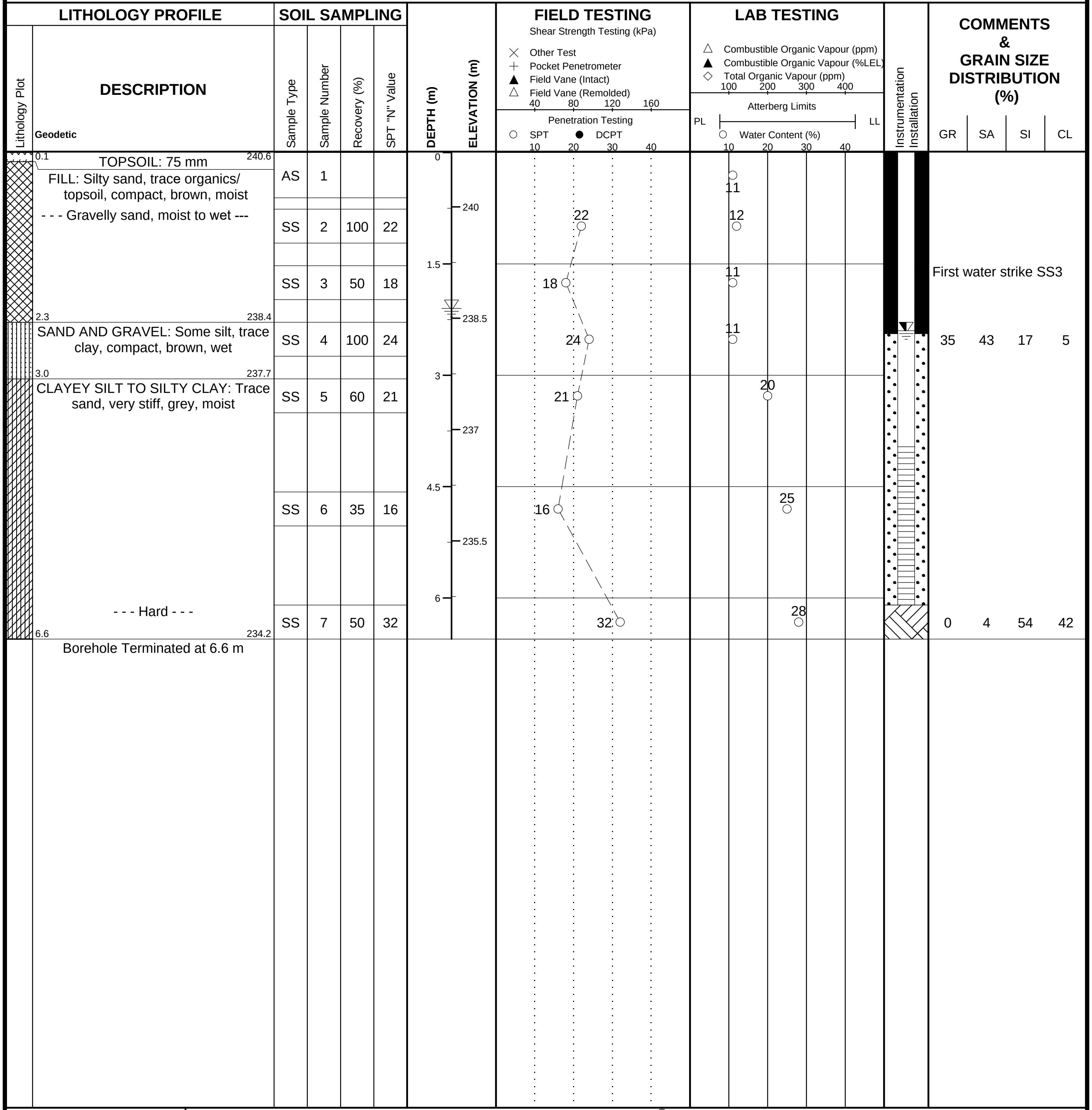

Depth (m)	Elevation (m)	DESCRIPTION	Sample Type	Sample Number	Recovery (%)	SPT "N" Value	Water Content (%)	COMMENTS	GR	SA	SI	CL
0.1	240.6	TOPSOIL: 75 mm										
		FILL: Silty sand, trace organics/ topsoil, compact, brown, moist	AS	1			11					
		- - - Gravelly sand, moist to wet ---	SS	2	100	22	12					
			SS	3	50	18	11	First water strike SS3				
2.3	238.4	SAND AND GRAVEL: Some silt, trace clay, compact, brown, wet	SS	4	100	24	11		35	43	17	5
3.0	237.7	CLAYEY SILT TO SILTY CLAY: Trace sand, very stiff, grey, moist	SS	5	60	21	20					
			SS	6	35	16	25					
6.6	234.2	- - - Hard - - -	SS	7	50	32	28		0	4	54	42

Borehole Terminated at 6.6 m

GEI CONSULTANTS
647 Welham Road, Unit 14
Barrie, Ontario L4N 0B7
T : (705) 719-7994
www.geiconsultants.com

Groundwater depth encountered on completion of drilling: 2.1 m.

Cave depth after auger removal: Open

Groundwater depth observed on: Dec 6/22 at depth of: 2.4 m.

Groundwater Elevation: 238.3 m

Borehole details presented do not constitute a thorough understanding of all potential conditions present and require interpretative assistance from a qualified geotechnical engineer. Also, borehole information should be read in conjunction with the geotechnical report for which it was commissioned and the accompanying 'Explanation of Boring Log'.

Scale: **1 :75**

Appendix B

Geotechnical Laboratory Testing

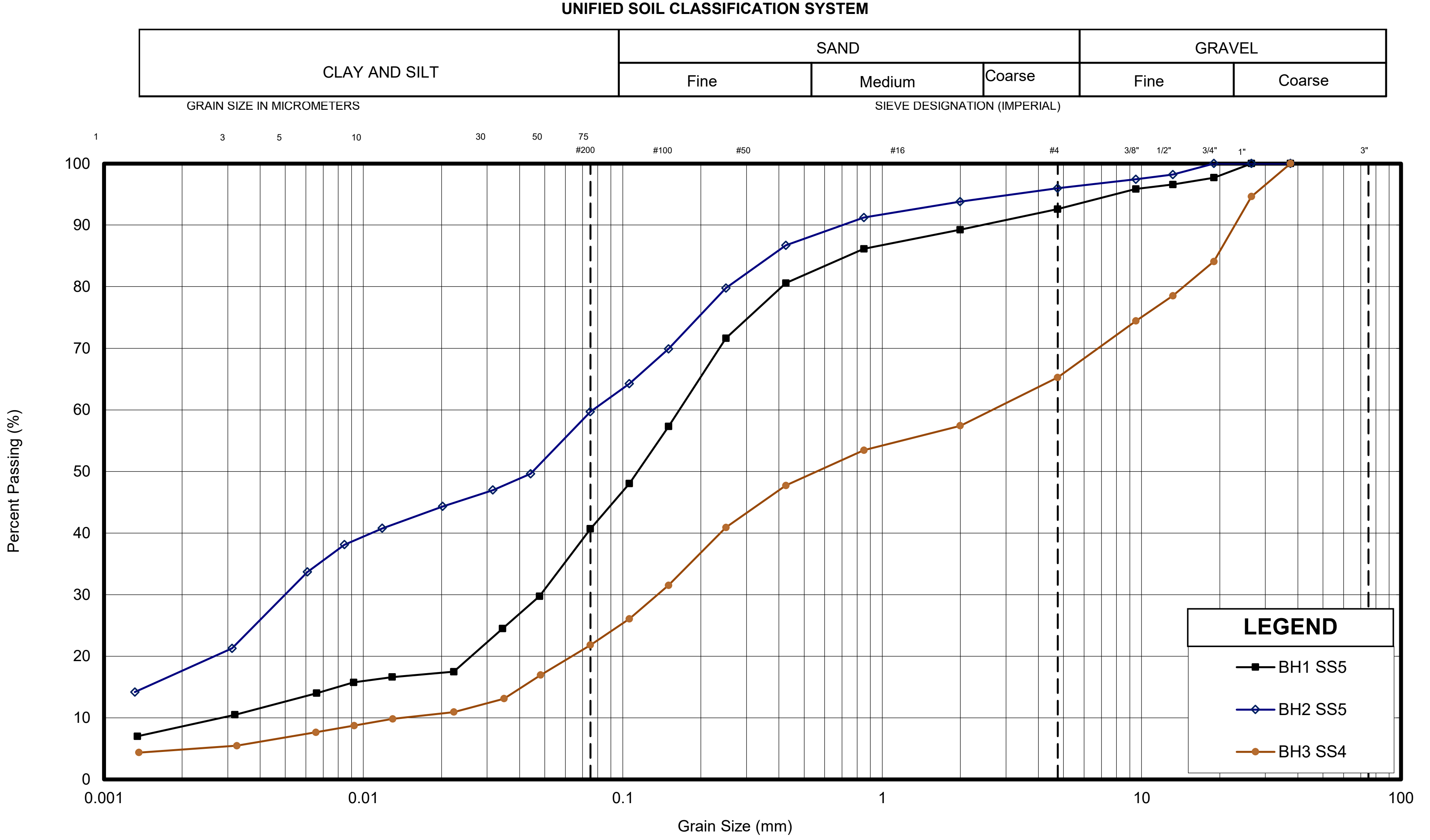

Sample	Description	Gr.	Sa.	Si.	Cl.	D_{10}	D_{30}	D_{60}	C_u	C_c
BH1 SS5	SILTY SAND, Trace Clay, Trace Gravel	7	52	32	9	0.003	0.048	0.165	55.0	4.7
BH2 SS5	SAND AND SILT, Some Clay, Trace Gravel	4	36	42	18	-	0.005	0.077	-	-
BH3 SS4	GRAVEL AND SAND, Some Silt, Trace Clay	35	43	17	5	0.014	0.136	2.657	189.8	0.5

GEI Consultants

GRAIN SIZE DISTRIBUTION - 159 Huronia Road

SILTY SAND / SANDY SILT / GRAVEL AND SAND

FIGURE No. B1
REF. No. 2204000
DATE March 2023

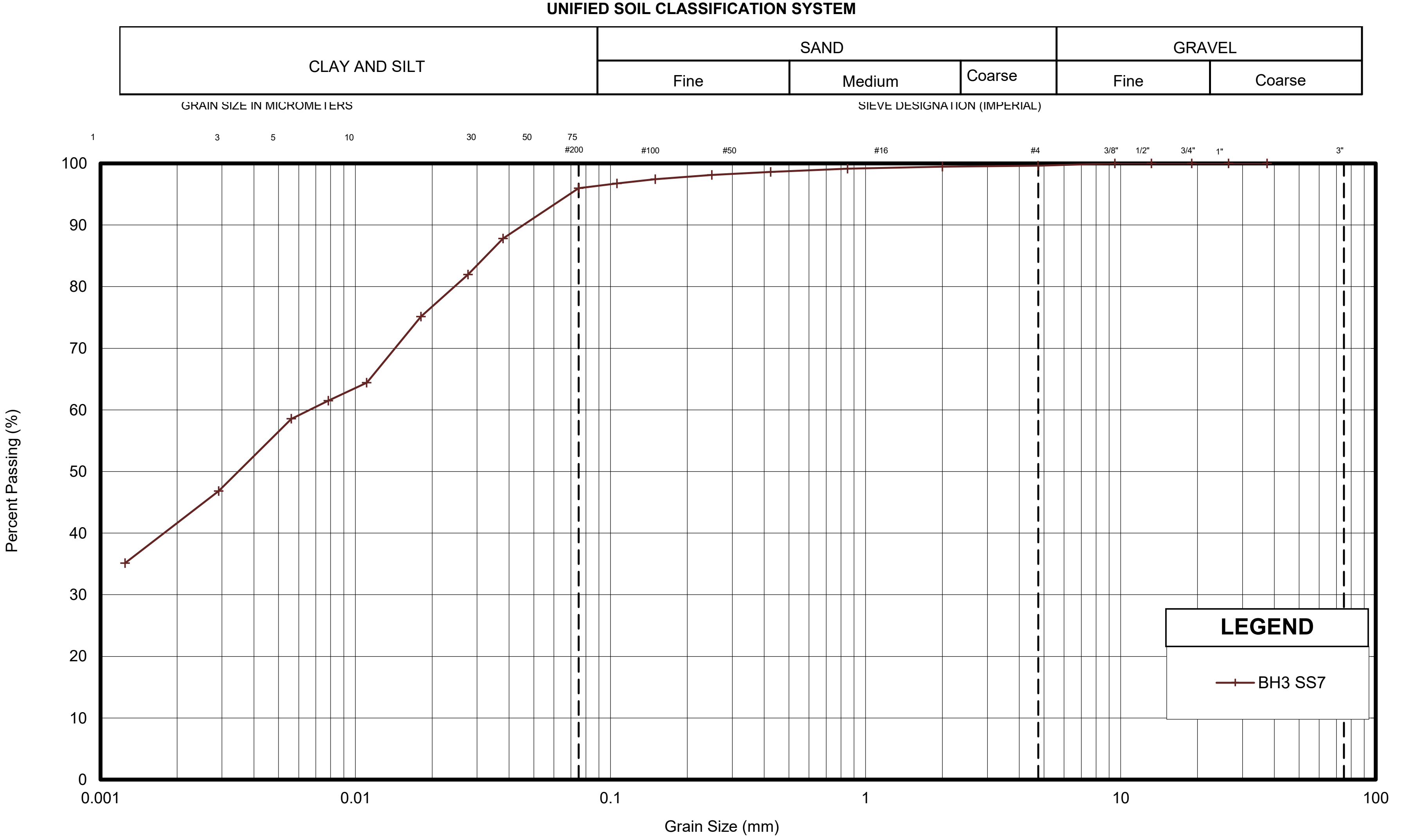

Sample	Description	Gr.	Sa.	Si.	Cl.	D_{10}	D_{30}	D_{60}	C_u	C_c
BH3 SS7	CLAY AND SILT, Trace Sand	-	4	54	42	-	-	0.007	-	-

GEI Consultants

GRAIN SIZE DISTRIBUTION - 159 Huronia Road

CLAYEY SILT TO SILTY CLAY

FIGURE No. B2
REF. No. 2204000
DATE March 2023

Appendix C

Typical Details

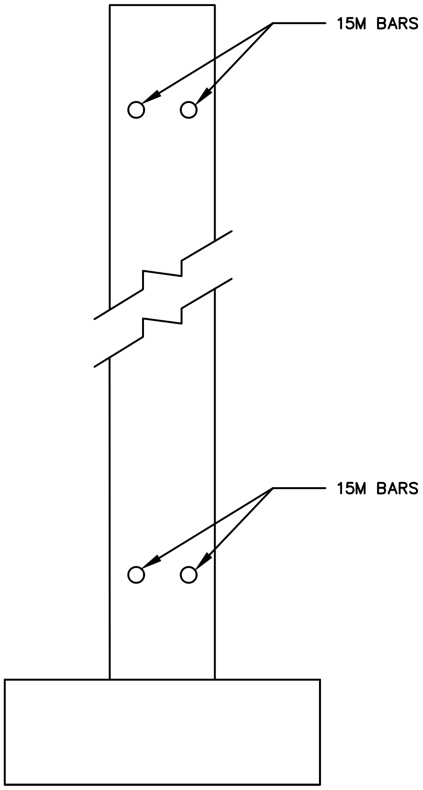

TYPICAL REINFORCED WALL

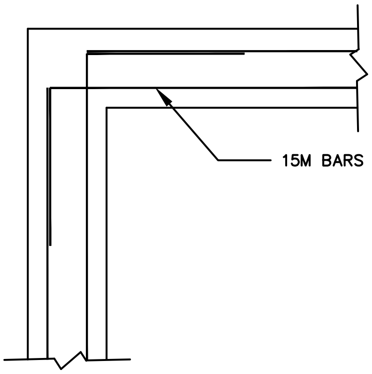

TYPICAL SPLICING AT CORNERS

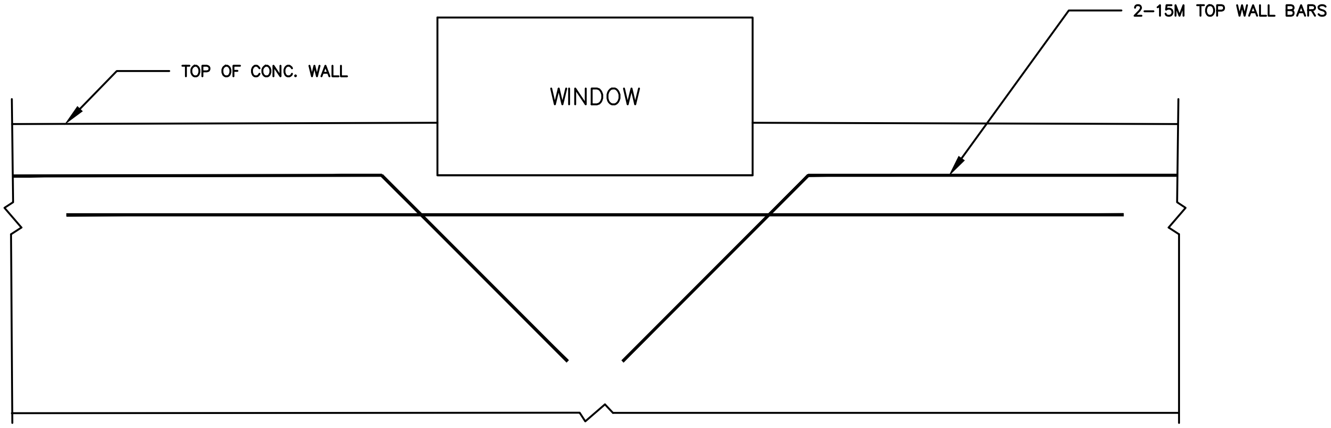

TYPICAL WINDOW REINFORCING

GEI Consultants

647 Welham Rd, Unit 14, Barrie, ON, L4N 0B7

FOUNDATION WALL REINFORCING ON ENGINEERED FILL TYPICAL DETAIL

Notes:

1. Engineered Fill compacted to 98% S.P.M.D.D and inspected under the full time supervision of CEE.
2. Interior non-structural compacted fill compacted to 98% S.P.M.D.D. with recommended part-time inspection.

S.P.M.D.D.– Standard Proctor Maximum Dry Density

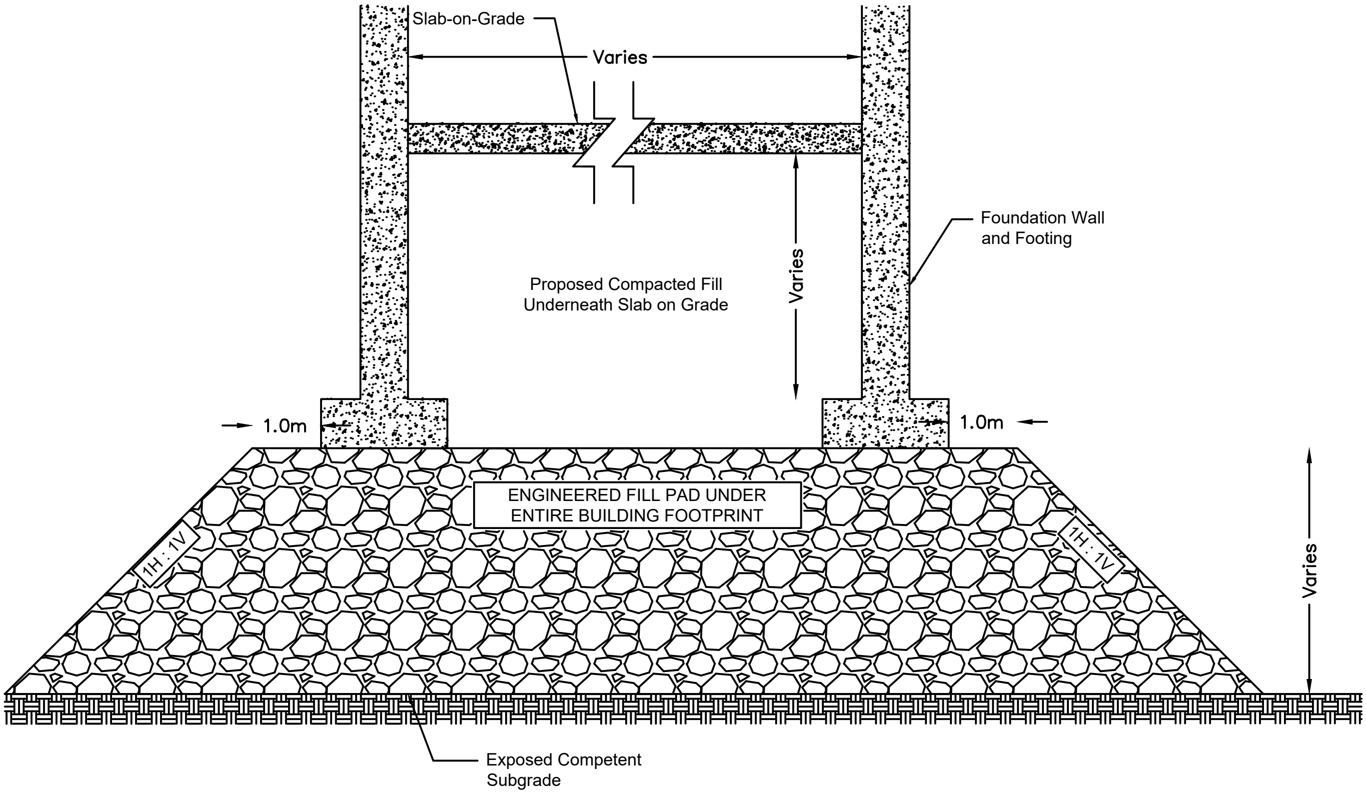

GEI Consultants

647 Welham Rd, Unit 14, Barrie, ON, L4N 0B7

ENGINEERED FILL PAD DIMENSIONING TYPICAL DETAIL

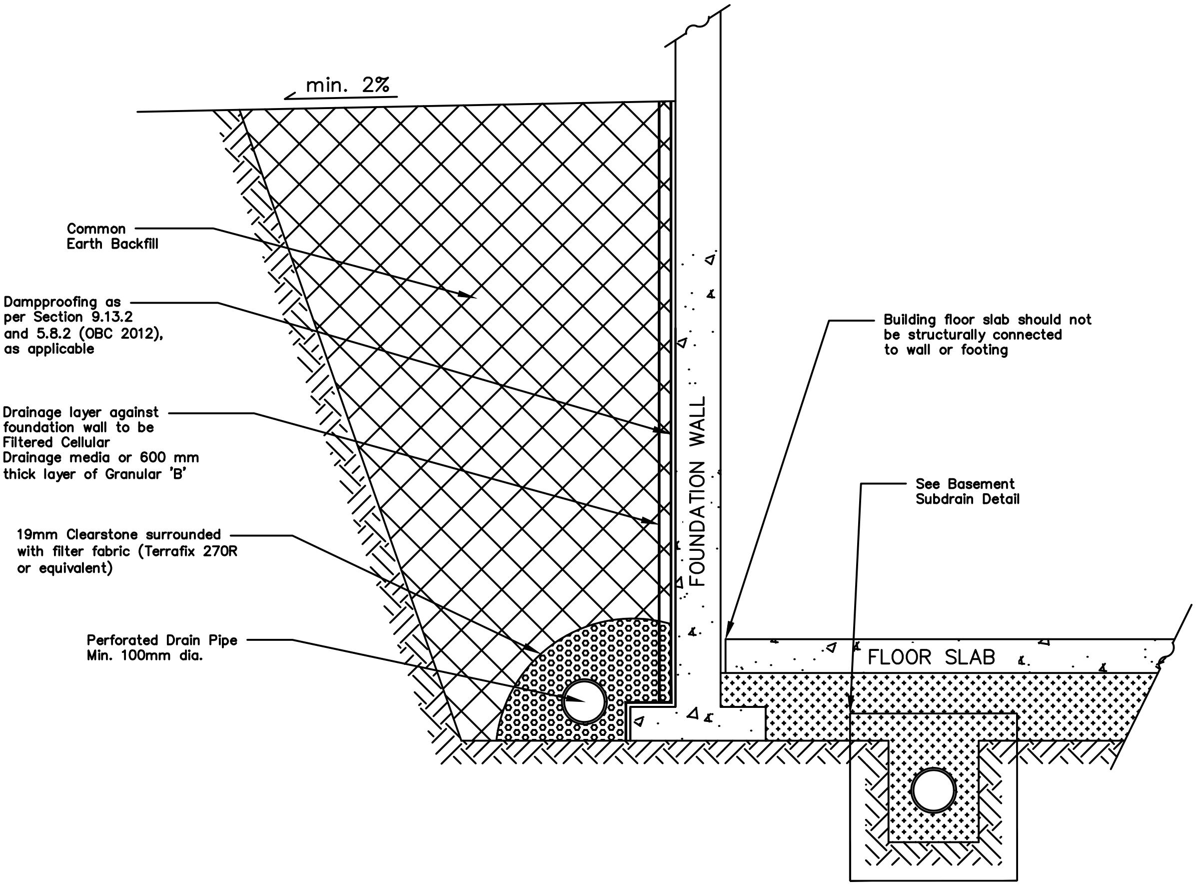

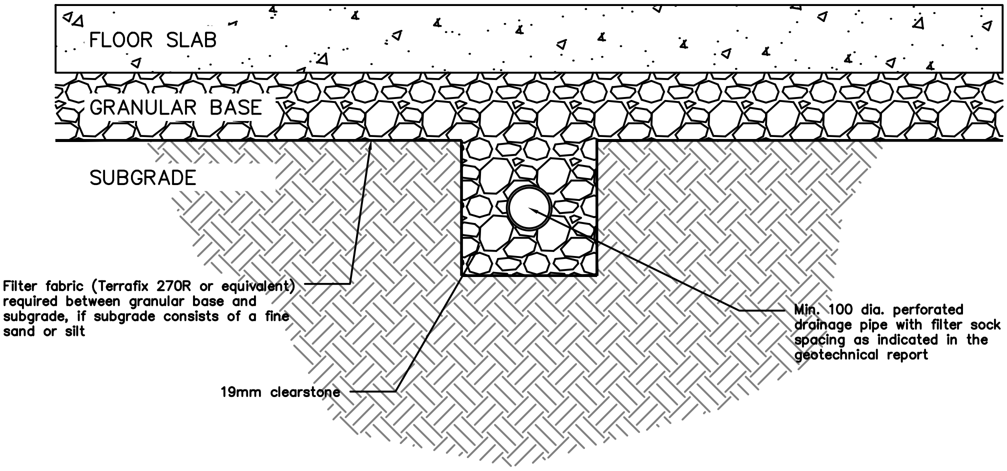

GEI Consultants

647 Welham Rd, Unit 14, Barrie, ON, L4N 0B7

BASEMENT FOUNDATION WALL & SUBFLOOR DRAINAGE TYPICAL DETAIL