518-524 TIFFIN STREET, BARRIE, ON

MUNICIPAL FILE: D28-082-2021

LANDMARK ENVIRONMENTAL GROUP LTD.

PROJECT NO. LA 656-22

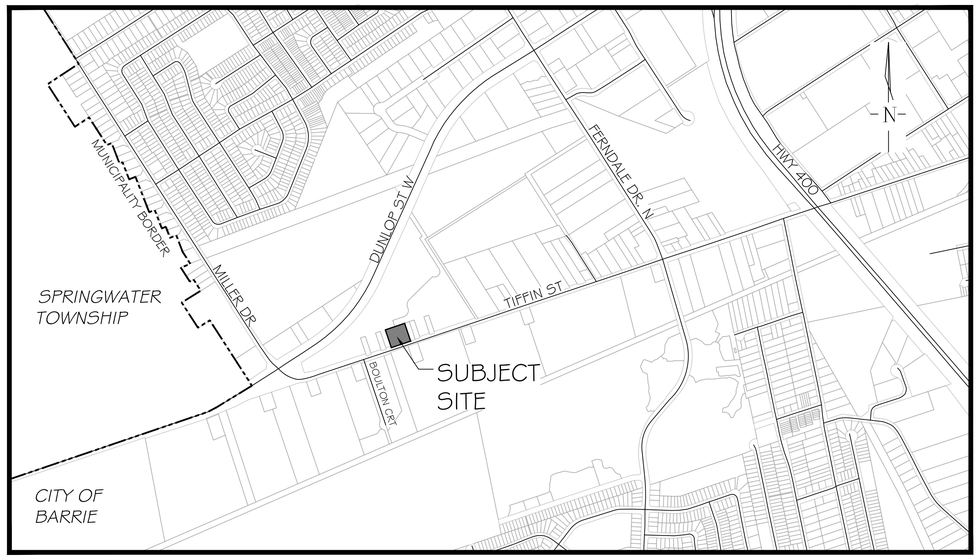

KEY PLAN N.T.S.

DRAWING LIST:

EX-1	EXISTING CONDITIONS
TP-1	TREE PRESERVATION PLAN 1
TP-2	TREE PRESERVATION PLAN 2
L-1	LANDSCAPE PLAN
LD-1	DETAILS 1
LD-2	DETAILS 2

CLIENT:

PIONEER POOLS
518-524 TIFFIN STREET,
BARRIE, ON

MUNICIPALITY:

CITY OF BARRIE
70 COLLIER STREET, P.O. BOX 400,
BARRIE, ON
L4M 4T5

LANDSCAPE ARCHITECT:

LANDMARK ENVIRONMENTAL GROUP LTD
Landscape Architects
Consulting Arborists
Urban Forestry

LANDSCAPE ARCHITECTS
& CONSULTING ARBORISTS
OFFICE: 705-796-1122
info@LEGroupLtd.com
www.LEGroupLtd.com

ONSITE TREE INVENTORY								
Key	Latin Name	Common Name	Tree Diameter (cm DBH)	Comments	Asssesment	Canopy Radius	Preserve /Remove	Tree Location
1	*Acer negundo*	Manitoba Maple	12	embedded metal, lean to west, growing into hydro	1 Poor	4.5	Preserve	
2	*Acer negundo*	Manitoba Maple	35.3	leader on power lines, co dominant, embedded metal fence, coppice growth, bark tear	1 Poor	5.2	Preserve	
3	*Acer negundo*	Manitoba Maple	28.6	dual leaders included bark epicormic branching, fence attaching to tree	2 Marginal	5.2	Preserve	
4	*Acer saccharinum*	Silver Maple	42.1	multiple leaders at base removed included bark vertical crack at top, good bark vigour	2 Marginal	5.9	Preserve	
5	*Acer negundo*	Manitoba Maple	17.6, 14	lean to west, included bark at base, epicormic branching, lower branch dieback	1 Poor	5.4	Preserve	
6	*Acer negundo*	Manitoba Maple	20.7	lean to west, epicormic branching, branch dieback	1 Poor	5.4	Preserve	
7	*Acer negundo*	Manitoba Maple	22.9	multiple leader included bark, epicormic branching, branch dieback	1 Poor	5.0	Preserve	
8	*Acer negundo*	Manitoba Maple	37.9	multiple leader included bark, epicormic branching, branch dieback	1 Poor	3.4	Preserve	
9	*Acer rubrum*	Red Maple	43.5,32	dual stems included bark, target canker, bark rubbing,	2 Marginal	9.1	Preserve	
10	*Acer rubrum*	Red Maple	42.5	pushing against fence, minor deadwood	3 Fair	5.6	Preserve	
11	*Acer rubrum*	Red Maple	16.2	twisted trunk, bark wound, sweeping trunk	2 Marginal	2.2	Preserve	
12	*Acer saccharinum*	Silver Maple	52	co dominant, branch dieback, coppice growth, epicormic branching	2 Marginal	5.6	Remove	
13	*Acer saccharinum*	Silver Maple	10, 16.2, 14.2	epicormic branching, multiple stems included bark, coppice growth, poor branch structure,	1 Poor	4.5	Remove	
14	*Acer saccharinum*	Silver Maple	70.9	co dominant included bark, multiple leader included bark, fill on south east of tree	2 Marginal	6.7	Remove	
15	*Acer saccharinum*	Silver Maple	125	multiple stems at 1.5m, included bark epicormic branching, wet seam,	3 Fair	9.8	Remove	
16	*Acer negundo*	Manitoba Maple	46, 33, 34.5	multiple leader included bark epicormic branching deadwood hydro wire pole, twisted stems	1 Poor	8.1	Remove	
17	*Acer saccharinum*	Silver Maple	52, 44, 17	multiple stems included bark, phototrophic lean, running through hydro, decay on east side	2 Marginal	9.4	Remove	
18	*Salix nigra*	Willow	est 65, 68	interior decay, cavity's large broken branch hangar, epicormic branching, bark wounds	1 Poor	6.7	Remove	
19	*Acer saccharinum*	Silver Maple	10.5, 15.5, 17	multiple stems included bark at base, epicormic branching	2 Marginal	3.5	Remove	
20	*Picea glauca*	White Spruce	56.5	branch tip dieback, epicormic branching, bark beetles, sap pitching	1 Poor	5.2	Remove	

**TREE LOCATIONS CAPTURED USING TRIMBLE GNSS UNITS AND ARCGIS SOFTWARE

OFFSITE TREE INVENTORY			
Key	Latin Name	Common Name	Canopy Radius
A	*Tilia americana*	Basswood/Linden	2.5
B	*Picea glauca*	White Spruce	1.6
C	*Acer platanoides*	Norway Maple	3.1
D	*Juniperus virginiana*	Eastern Red Juniper	0.5
E	*Juniperus virginiana*	Eastern Red Juniper	1.8
f	*Acer negundo*	Manitoba Maple	6.2
G	*Acer negundo*	Manitoba Maple	2.4
H	*Acer negundo*	Manitoba Maple	2.0
J	*Acer saccharinum*	Silver Maple	9.9
K	*Ulmus americana*	American Elm	6.2
L	*Populus tremuloides*	Trembling Aspen	4.0
M	*Acer rubrum*	Red Maple	3.4
N	*Acer saccharinum*	Silver Maple	7.8
P	*Acer saccharinum*	Silver Maple	7.0

ONSITE TREE	
BOUNDARY TREE	

NOTE:
IN ACCORDANCE WITH THE ARBOR REPORT, IT IS RECOMMENDED THAT THE OWNER OBTAIN A CONSENT TO HARM OR REMOVE AGREEMENT FOR TREE NO. 1- 10 & TREE A-J FROM THE PROPERTY OWNER OF 516 TIFFIN STREET.

NOTE:
VEGETATION CLEARING IS TO BE AVOIDED FROM APRIL 1 TO AUGUST 31 TO AVOID IMPACTS TO BIRDS PROTECTED UNDER THE MIGRATORY BIRDS CONVENTION ACT.
IF CLEARING MUST PROCEED WITHIN THIS WINDOW, THE AFFECTED AREA MUST BE SCREENED BY A QUALIFIED ECOLOGIST BEFORE 48HRS OF CLEARING ACTIVITIES.

KEY PLAN NTS

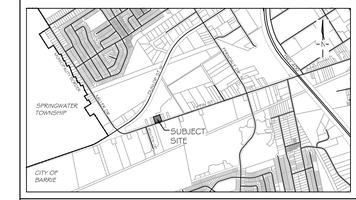

GENERAL NOTES

The Client and its contractors are responsible for all utility locates and confirming all setbacks, elevations, grades, etc. prior to installation of the constructed works. The Contractor is to report any discrepancies in writing to the Landscape Architect prior to proceeding with the works to determine the impact and suitability of the proposed works. The Landscape Architect will not be responsible for any unapproved adjustments on site. Construction of the works must conform to Authority requirements and applicable codes where they have jurisdiction.
All specifications and drawings are instruments of service and are the property and ownership of the Landmark Environmental Group Ltd. As such, the drawings shall not be modified or reproduced without the expressed written consent of Landmark Environmental Group Ltd. or they will be considered void. The said drawings are for Site Plan approval only and may require additional detailing prior to tender and construction. The Landmark Environmental Group Ltd. is not liable for errors or omissions from the use of these drawings prior to approval, seal, signature and date, and will be considered void.
It is advised that the Contractor contact the Landscape Architect prior to commencement of the construction works to ensure that the Contractor has the latest approved drawings. The Landmark Environmental Group Ltd. is not responsible for the accuracy of the base drawing information (eg Survey, Architectural, Engineering, etc). If there are any discrepancies, the Contractor will refer to the appropriate base drawing information and report discrepancies on the Landscape Drawings to the Landscape Architect.

© Copyright Landmark Environmental Group Ltd.

LEGEND

2 ONSITE TREE LOCATION WITH CANOPY

B OFFSITE TREE LOCATION WITH CANOPY

PROPERTY BOUNDARY

NO	DATE	BY	REVISIONS
7	JULY 29,2024	E.F	REVISIONS TO FENCING
6	JULY 19,2024	S.K	AS PER SITE PLAN UPDATES
5	JULY 6,2023	S.K	AS PER THE CITY COMMENTS
4	APRIL 14,2023	R.T	AS PER UPDATED GRADING
3	SEPT 23-22	R.T	AS PER SITE PLAN UPDATES
2	APRIL 20-22	S.K	AS PER SITE PLAN UPDATES & LANDSCAPE CONCEPT DEVELOPMENT
1	APRIL 07-22	B.B	AS PER NEW SITE PLAN

STAMP

ONTARIO ASSOCIATION OF LANDSCAPE ARCHITECTS
JAMES MCBRIDE
OALA
JULY 29 2024
MEMBER

APPROVAL

AERIAL (2023) COURTESY SIMCOE COUNTY GIS
SITE PLAN PROVIDED BY JONES CONSULTING GROUP LTD.
(PIO-21060-CP-12.DWG TRANS ON JULY 11, 2024)

LANDMARK ENVIRONMENTAL GROUP LTD
Landscape Architects Consulting Arborists Urban Forestry
LANDSCAPE ARCHITECTS & CONSULTING ARBORISTS
OFFICE: 705-796-1122
info@LEGroupLtd.com
www.LEGroupLtd.com

CLIENT:
PIONEER POOLS

PROJECT:
518-524 TIFFIN STREET
STORAGE YARD DEVELOPMENT

DRAWING:
EXISTING CONDITIONS

SCALE BAR: 4m 0 4 8 12
Scale = 1:200

PROJECT NO.: LA 656-22	SCALE: 1:200
MUNICIPAL FILE NO.: D28-082-2021	DATE: FEBRUARY 28, 2022
DRAWN BY: L.O/B.B CHECKED BY: J.H	DRAWING No.: EX-1

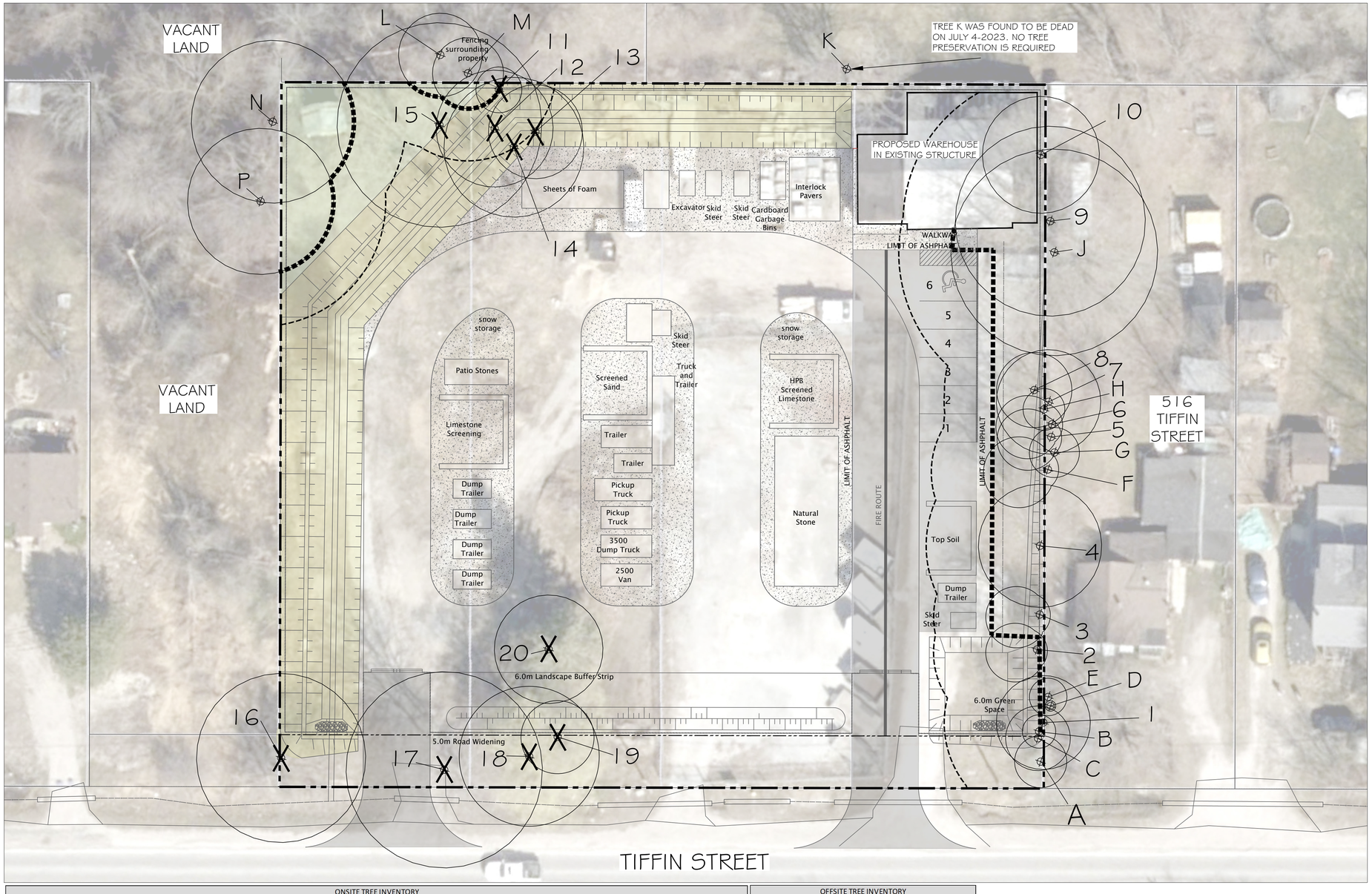

ONSITE TREE INVENTORY								
Key	Latin Name	Common Name	Tree Diameter (cm DBH)	Comments	Asssesment	Canopy Radius	Preserve /Remove	Tree Location
1	*Acer negundo*	Manitoba Maple	12	embedded metal, lean to west, growing into hydro	1 Poor	4.5	Preserve	
2	*Acer negundo*	Manitoba Maple	35.3	leader on power lines, co dominant, embedded metal fence, coppice growth, bark tear	1 Poor	5.2	Preserve	
3	*Acer negundo*	Manitoba Maple	28.6	dual leaders included bark epicormic branching, fence attaching to tree	2 Marginal	5.2	Preserve	
4	*Acer saccharinum*	Silver Maple	42.1	multiple leaders at base removed included bark vertical crack at top, good bark vigour	2 Marginal	5.9	Preserve	
5	*Acer negundo*	Manitoba Maple	17.6, 14	lean to west, included bark at base, epicormic branching, lower branch dieback	1 Poor	5.4	Preserve	
6	*Acer negundo*	Manitoba Maple	20.7	lean to west, epicormic branching, branch dieback	1 Poor	5.4	Preserve	
7	*Acer negundo*	Manitoba Maple	22.9	multiple leader included bark, epicormic branching, branch dieback	1 Poor	5.0	Preserve	
8	*Acer negundo*	Manitoba Maple	37.9	multiple leader included bark, epicormic branching, branch dieback	1 Poor	3.4	Preserve	
9	*Acer rubrum*	Red Maple	43.5,32	dual stems included bark, target canker, bark rubbing,	2 Marginal	9.1	Preserve	
10	*Acer rubrum*	Red Maple	42.5	pushing against fence, minor deadwood	3 Fair	5.6	Preserve	
11	*Acer rubrum*	Red Maple	16.2	twisted trunk, bark wound, sweeping trunk	2 Marginal	2.2	Preserve	
12	*Acer saccharinum*	Silver Maple	52	co dominant, branch dieback, coppice growth, epicormic branching	2 Marginal	5.6	Remove	
13	*Acer saccharinum*	Silver Maple	10, 16.2, 14.2	epicormic branching, multiple stems included bark, coppice growth, poor branch structure,	1 Poor	4.5	Remove	
14	*Acer saccharinum*	Silver Maple	70.9	co dominant included bark, multiple leader included bark, fill on south east of tree	2 Marginal	6.7	Remove	
15	*Acer saccharinum*	Silver Maple	125	multiple stems at 1.5m, included bark epicormic branching, wet seam,	3 Fair	9.8	Remove	
16	*Acer negundo*	Manitoba Maple	46, 33, 34.5	multiple leader included bark epicormic branching deadwood hydro wire pole, twisted stems	1 Poor	8.1	Remove	
17	*Acer saccharinum*	Silver Maple	52, 44, 17	multiple stems included bark, phototrophic lean, running through hydro, decay on east side	2 Marginal	9.4	Remove	
18	*Salix nigra*	Willow	est 65, 68	interior decay, cavity's large broken branch hangar, epicormic branching, bark wounds	1 Poor	6.7	Remove	
19	*Acer saccharinum*	Silver Maple	10.5, 15.5, 17	multiple stems included bark at base, epicormic branching	2 Marginal	3.5	Remove	
20	*Picea glauca*	White Spruce	56.5	branch tip dieback, epicormic branching, bark beetles, sap pitching	1 Poor	5.2	Remove	

**TREE LOCATIONS CAPTURED USING TRIMBLE GNSS UNITS AND ARCGIS SOFTWARE

OFFSITE TREE INVENTORY			
Key	Latin Name	Common Name	Canopy Radius
A	*Tilia americana*	Basswood/Linden	2.5
B	*Picea glauca*	White Spruce	1.6
C	*Acer platanoides*	Norway Maple	3.1
D	*Juniperus virginiana*	Eastern Red Juniper	0.5
E	*Juniperus virginiana*	Eastern Red Juniper	1.8
f	*Acer negundo*	Manitoba Maple	6.2
G	*Acer negundo*	Manitoba Maple	2.4
H	*Acer negundo*	Manitoba Maple	2.0
J	*Acer saccharinum*	Silver Maple	9.9
K	*Ulmus americana*	American Elm	6.2
L	*Populus tremuloides*	Trembling Aspen	4.0
M	*Acer rubrum*	Red Maple	3.4
N	*Acer saccharinum*	Silver Maple	7.8
P	*Acer saccharinum*	Silver Maple	7.0

ONSITE TREE	
BOUNDARY TREE	

NOTE:
IN ACCORDANCE WITH THE ARBOR REPORT, IT IS RECOMMENDED THAT THE OWNER OBTAIN A CONSENT TO HARM OR REMOVE AGREEMENT FOR TREE NO. 1- 10 & TREE A-J FROM THE PROPERTY OWNER OF 516 TIFFIN STREET.

NOTE:
VEGETATION CLEARING IS TO BE AVOIDED FROM APRIL 1 TO AUGUST 31 TO AVOID IMPACTS TO BIRDS PROTECTED UNDER THE MIGRATORY BIRDS CONVENTION ACT.
IF CLEARING MUST PROCEED WITHIN THIS WINDOW, THE AFFECTED AREA MUST BE SCREENED BY A QUALIFIED ECOLOGIST BEFORE 48HRS OF CLEARING ACTIVITIES.

KEY PLAN NTS

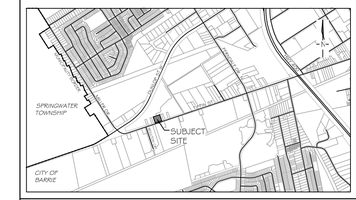

GENERAL NOTES

The Client and its contractors are responsible for all utility locates and confirming all setbacks, elevations, grades, etc. prior to installation of the constructed works. The Contractor is to report any discrepancies in writing to the Landscape Architect prior to proceeding with the works to determine the impact and suitability of the proposed works. The Landscape Architect will not be responsible for any unapproved adjustments on site. Construction of the works must conform to Authority requirements and applicable codes where they have jurisdiction.
All specifications and drawings are instruments of service and are the property and ownership of the Landmark Environmental Group Ltd. As such, the drawings shall not be modified or reproduced without the expressed written consent of Landmark Environmental Group Ltd. or they will be considered void. The said drawings are for Site Plan approval only and may require additional detailing prior to tender and construction. The Landmark Environmental Group Ltd. is not liable for errors or omissions from the use of these drawings prior to approval, seal, signature and date, and will be considered void.
It is advised that the Contractor contact the Landscape Architect prior to commencement of the construction works to ensure that the Contractor has the latest approved drawings. The Landmark Environmental Group Ltd. is not responsible for the accuracy of the base drawing information (eg Survey, Architectural, Engineering, etc). If there are any discrepancies, the Contractor will refer to the appropriate base drawing information and report discrepancies on the Landscape Drawings to the Landscape Architect.

© Copyright Landmark Environmental Group Ltd.

LEGEND

- ONSITE TREE LOCATION WITH CANOPY
- OFFSITE TREE LOCATION WITH CANOPY
- PROPERTY BOUNDARY
- TREE PRESERVATION FENCING
- X TREE RECOMMENDED FOR REMOVAL
- 5M DEVELOPMENT SETBACK

NO	DATE	BY	REVISIONS
7	JULY 29,2024	E.F	REVISIONS TO FENCING
6	JULY 19,2024	S.K	AS PER SITE PLAN UPDATES
5	JULY 6,2023	S.K	AS PER THE CITY COMMENTS
4	APRIL 14,2023	R.T	AS PER UPDATED GRADING
3	SEPT 23-22	R.T	AS PER SITE PLAN UPDATES
2	APRIL 20-22	S.K	AS PER SITE PLAN UPDATES & LANDSCAPE CONCEPT DEVELOPMENT
1	APRIL 07-22	B.B	AS PER NEW SITE PLAN

STAMP

ONTARIO ASSOCIATION OF LANDSCAPE ARCHITECTS
JAMES MORRISON
OALA
JULY 29 2024
MEMBER

APPROVAL

AERIAL (2023) COURTESY SIMCOE COUNTY GIS
SITE PLAN PROVIDED BY JONES CONSULTING GROUP LTD.
(PIO-21060-CP-12.DWG TRANS ON JULY 11, 2024)

LANDMARK ENVIRONMENTAL GROUP LTD
Landscape Architects Consulting Arborists Urban Forestry
LANDSCAPE ARCHITECTS & CONSULTING ARBORISTS
OFFICE: 705-796-1122
info@LEGroupLtd.com
www.LEGroupLtd.com

CLIENT:
PIONEER POOLS

PROJECT:
518-524 TIFFIN STREET
STORAGE YARD DEVELOPMENT

DRAWING:
TREE PRESERVATION PLAN 1

SCALE BAR: 4m 0 4 8 12
Scale = 1:200

PROJECT NO.:	SCALE:
LA 656-22	1:200
MUNICIPAL FILE NO.:	DATE:
D28-082-2021	FEBRUARY 28, 2022
DRAWN BY: L.O/B.B	CHECKED BY: J.H / DRAWING No.: TP-1

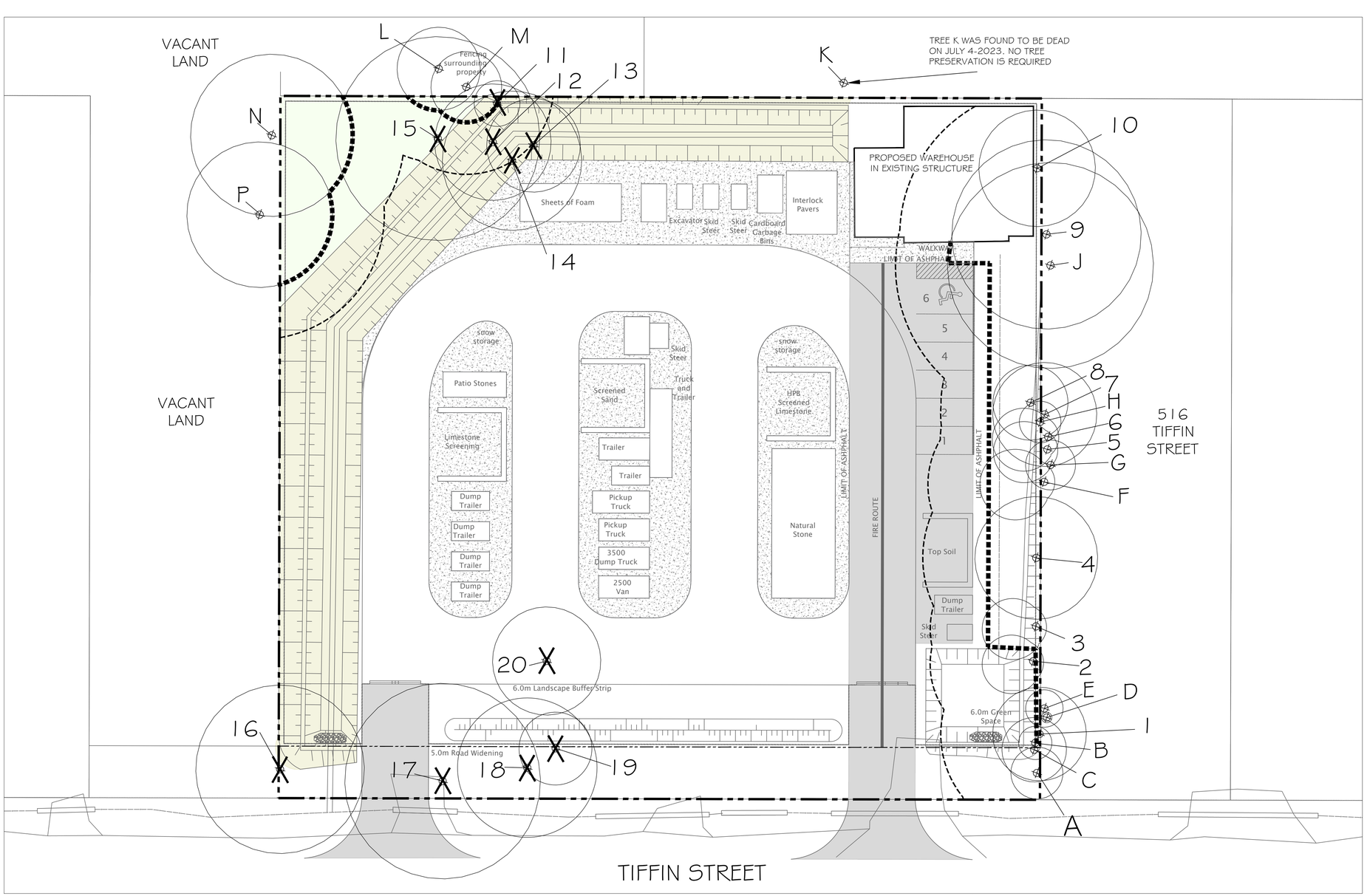

ONSITE TREE INVENTORY								
Key	Latin Name	Common Name	Tree Diameter (cm DBH)	Comments	Asssesment	Canopy Radius	Preserve /Remove	Tree Location
1	*Acer negundo*	Manitoba Maple	12	embedded metal, lean to west, growing into hydro	1 Poor	4.5	Preserve	
2	*Acer negundo*	Manitoba Maple	35.3	leader on power lines, co dominant, embedded metal fence, coppice growth, bark tear	1 Poor	5.2	Preserve	
3	*Acer negundo*	Manitoba Maple	28.6	dual leaders included bark epicormic branching, fence attaching to tree	2 Marginal	5.2	Preserve	
4	*Acer saccharinum*	Silver Maple	42.1	multiple leaders at base removed included bark vertical crack at top, good bark vigour	2 Marginal	5.9	Preserve	
5	*Acer negundo*	Manitoba Maple	17.6, 14	lean to west, included bark at base, epicormic branching, lower branch dieback	1 Poor	5.4	Preserve	
6	*Acer negundo*	Manitoba Maple	20.7	lean to west, epicormic branching, branch dieback	1 Poor	5.4	Preserve	
7	*Acer negundo*	Manitoba Maple	22.9	multiple leader included bark, epicormic branching, branch dieback	1 Poor	5.0	Preserve	
8	*Acer negundo*	Manitoba Maple	37.9	multiple leader included bark, epicormic branching, branch dieback	1 Poor	3.4	Preserve	
9	*Acer rubrum*	Red Maple	43.5,32	dual stems included bark, target canker, bark rubbing,	2 Marginal	9.1	Preserve	
10	*Acer rubrum*	Red Maple	42.5	pushing against fence, minor deadwood	3 Fair	5.6	Preserve	
11	*Acer rubrum*	Red Maple	16.2	twisted trunk, bark wound, sweeping trunk	2 Marginal	2.2	Preserve	
12	*Acer saccharinum*	Silver Maple	52	co dominant, branch dieback, coppice growth, epicormic branching	2 Marginal	5.6	Remove	
13	*Acer saccharinum*	Silver Maple	10, 16.2, 14.2	epicormic branching, multiple stems included bark, coppice growth, poor branch structure,	1 Poor	4.5	Remove	
14	*Acer saccharinum*	Silver Maple	70.9	co dominant included bark, multiple leader included bark, fill on south east of tree	2 Marginal	6.7	Remove	
15	*Acer saccharinum*	Silver Maple	125	multiple stems at 1.5m, included bark epicormic branching, wet seam,	3 Fair	9.8	Remove	
16	*Acer negundo*	Manitoba Maple	46, 33, 34.5	multiple leader included bark epicormic branching deadwood hydro wire pole, twisted stems	1 Poor	8.1	Remove	
17	*Acer saccharinum*	Silver Maple	52, 44, 17	multiple stems included bark, phototrophic lean, running through hydro, decay on east side	2 Marginal	9.4	Remove	
18	*Salix nigra*	Willow	est 65, 68	interior decay, cavity's large broken branch hangar, epicormic branching, bark wounds	1 Poor	6.7	Remove	
19	*Acer saccharinum*	Silver Maple	10.5, 15.5, 17	multiple stems included bark at base, epicormic branching	2 Marginal	3.5	Remove	
20	*Picea glauca*	White Spruce	56.5	branch tip dieback, epicormic branching, bark beetles, sap pitching	1 Poor	5.2	Remove	

**TREE LOCATIONS CAPTURED USING TRIMBLE GNSS UNITS AND ARCGIS SOFTWARE

OFFSITE TREE INVENTORY			
Key	Latin Name	Common Name	Canopy Radius
A	*Tilia americana*	Basswood/Linden	2.5
B	*Picea glauca*	White Spruce	1.6
C	*Acer platanoides*	Norway Maple	3.1
D	*Juniperus virginiana*	Eastern Red Juniper	0.5
E	*Juniperus virginiana*	Eastern Red Juniper	1.8
f	*Acer negundo*	Manitoba Maple	6.2
G	*Acer negundo*	Manitoba Maple	2.4
H	*Acer negundo*	Manitoba Maple	2.0
J	*Acer saccharinum*	Silver Maple	9.9
K	*Ulmus americana*	American Elm	6.2
L	*Populus tremuloides*	Trembling Aspen	4.0
M	*Acer rubrum*	Red Maple	3.4
N	*Acer saccharinum*	Silver Maple	7.8
P	*Acer saccharinum*	Silver Maple	7.0

ONSITE TREE	
BOUNDARY TREE	

NOTE:
IN ACCORDANCE WITH THE ARBOR REPORT, IT IS RECOMMENDED THAT THE OWNER OBTAIN A CONSENT TO HARM OR REMOVE AGREEMENT FOR TREE NO. 1- 10 & TREE A-J FROM THE PROPERTY OWNER OF 516 TIFFIN STREET.

NOTE:
VEGETATION CLEARING IS TO BE AVOIDED FROM APRIL 1 TO AUGUST 31 TO AVOID IMPACTS TO BIRDS PROTECTED UNDER THE MIGRATORY BIRDS CONVENTION ACT.
IF CLEARING MUST PROCEED WITHIN THIS WINDOW, THE AFFECTED AREA MUST BE SCREENED BY A QUALIFIED ECOLOGIST BEFORE 48HRS OF CLEARING ACTIVITIES.

KEY PLAN NTS

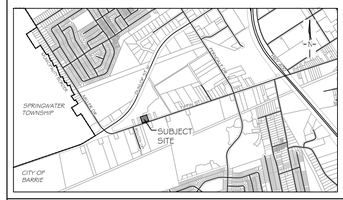

GENERAL NOTES

The Client and its contractors are responsible for all utility locates and confirming all setbacks, elevations, grades, etc. prior to installation of the constructed works.
The Contractor is to report any discrepancies in writing to the Landscape Architect prior to proceeding with the works to determine the impact and suitability of the proposed works. The Landscape Architect will not be responsible for any unapproved adjustments on site. Construction of the works must conform to Authority requirements and applicable codes where they have jurisdiction.
All specifications and drawings are instruments of service and are the property and ownership of the Landmark Environmental Group Ltd. As such, the drawings shall not be modified or reproduced without the expressed written consent of Landmark Environmental Group Ltd. or they will be considered void. The said drawings are for Site Plan approval only and may require additional detailing prior to tender and construction. The Landmark Environmental Group Ltd. is not liable for errors or omissions from the use of these drawings prior to approval, seal, signature and date, and will be considered void.
It is advised that the Contractor contact the Landscape Architect prior to commencement of the construction works to ensure that the Contractor has the latest approved drawings. The Landmark Environmental Group Ltd. is not responsible for the accuracy of the base drawing information (eg Survey, Architectural, Engineering, etc). If there are any discrepancies, the Contractor will refer to the appropriate base drawing information and report discrepancies on the Landscape Drawings to the Landscape Architect.

© Copyright Landmark Environmental Group Ltd.

LEGEND

- ONSITE TREE LOCATION WITH CANOPY
- OFFSITE TREE LOCATION WITH CANOPY
- PROPERTY BOUNDARY
- TREE PRESERVATION FENCING
- TREE RECOMMENDED FOR REMOVAL
- 5M DEVELOPMENT SETBACK
- RESTORATION AREA LIMIT
- NATURALIZATION AREA LIMIT

NO	DATE	BY	REVISIONS
7	JULY 29,2024	E.F	REVISIONS TO FENCING
6	JULY 19,2024	S.K.	AS PER SITE PLAN UPDATES
5	JULY 6,2023	S.K.	AS PER THE CITY COMMENTS
4	APRIL 14,2023	R.T	AS PER UPDATED GRADING
3	SEPT 23-22	R.T	AS PER SITE PLAN UPDATES
2	APRIL 20-22	S.K.	AS PER SITE PLAN UPDATES & LANDSCAPE CONCEPT DEVELOPMENT
1	APRIL 07-22	B.B	AS PER NEW SITE PLAN

STAMP

ONTARIO ASSOCIATION OF LANDSCAPE ARCHITECTS
JAMES MORRISON
OALA
JULY 29 2024
MEMBER

APPROVAL

AERIAL (2023) COURTESY SIMCOE COUNTY GIS
SITE PLAN PROVIDED BY JONES CONSULTING GROUP LTD.
(P10-21060-CP-12.DWG TRANS ON JULY 11, 2024)

LANDMARK ENVIRONMENTAL GROUP LTD
Landscape Architects Consulting Arborists Urban Forestry
LANDSCAPE ARCHITECTS & CONSULTING ARBORISTS
OFFICE: 705-796-1122
info@LEGroupLtd.com
www.LEGroupLtd.com

CLIENT:
PIONEER POOLS

PROJECT:
518-524 TIFFIN STREET
STORAGE YARD DEVELOPMENT

DRAWING:
TREE PRESERVATION PLAN 2

SCALE BAR: 4m 0 4 8 12
Scale = 1:200

PROJECT NO.: LA 656-22	SCALE: 1:200
MUNICIPAL FILE NO.: D28-082-2021	DATE: FEBRUARY 28, 2022
DRAWN BY: L.O/B.B CHECKED BY: J.H	DRAWING No.: TP-2

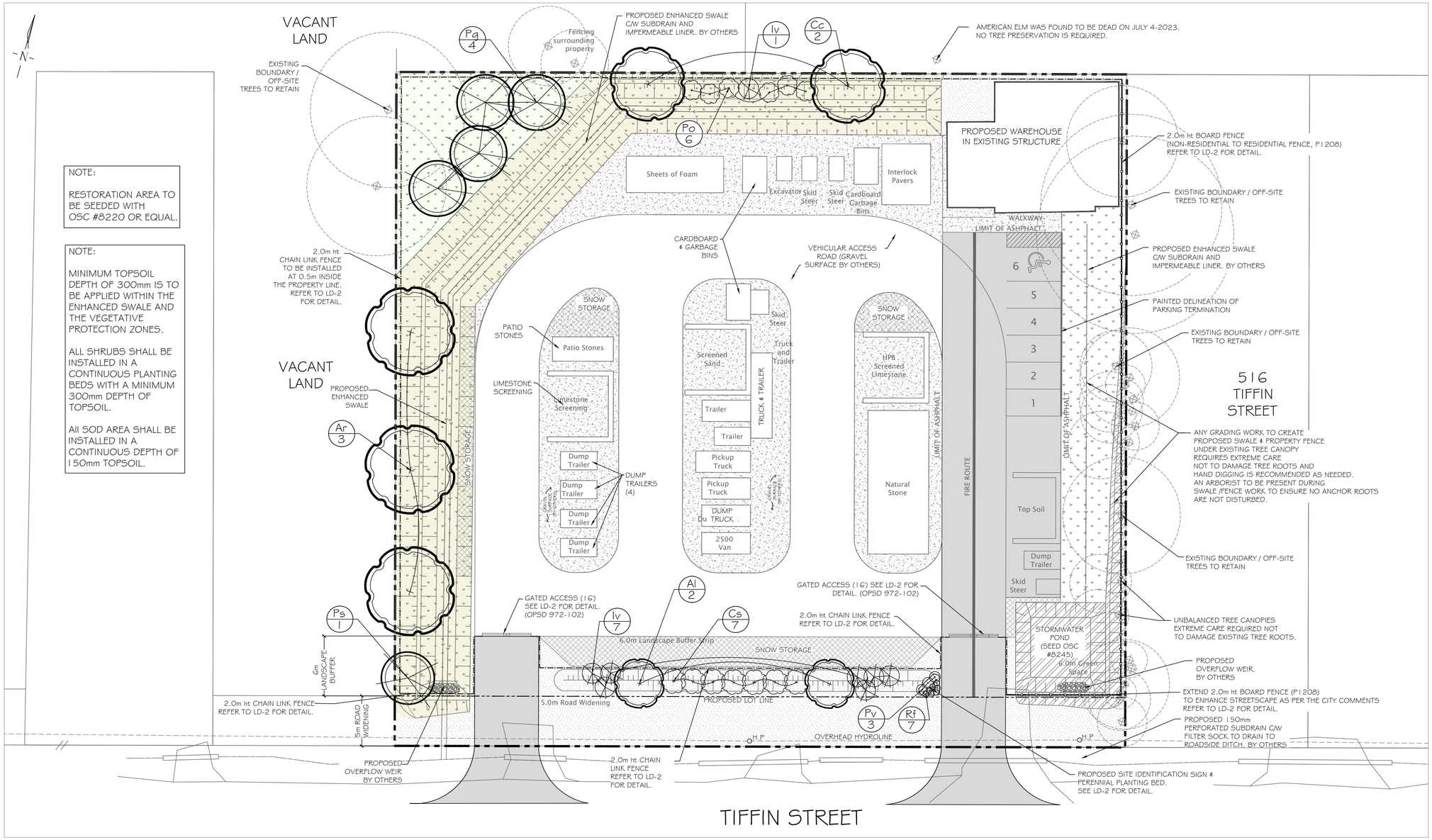

NOTE:

RESTORATION AREA TO BE SEEDED WITH OSC #8220 OR EQUAL.

NOTE:

MINIMUM TOPSOIL DEPTH OF 300mm IS TO BE APPLIED WITHIN THE ENHANCED SWALE AND THE VEGETATIVE PROTECTION ZONES.

ALL SHRUBS SHALL BE INSTALLED IN A CONTINUOUS PLANTING BEDS WITH A MINIMUM 300mm DEPTH OF TOPSOIL.

All SOD AREA SHALL BE INSTALLED IN A CONTINUOUS DEPTH OF 150mm TOPSOIL.

PLANT DENSITY CALCULATIONS

AREA: 4934.60 SQUARE METERS | TYPE: INDUSTRIAL

REQUIRED MIN. TOTALS	PROPOSED TOTALS	VEGETATION TYPE	REQUIRED SIZING
7	7	DECIDUOUS TREES	60mm CAL
5	5	EVERGREEN TREES	2m HT
13	13	DECIDUOUS SHRUBS	0.6-1.2m HT
7	7	EVERGREEN SHRUBS	0.45m SPR/1.2m HT

PLANT LIST

KEY	QTY	BOTANICAL NAME	COMMON NAME	SIZE/CONDITION
		DECIDUOUS TREES		
Al	2	*Amelanchier laevis*	Allegheny Serviceberry (Clump)	60mm cal/WB
Ar	3	*Acer rubrum*	Red Maple	60mm cal/WB
Cc	2	*Carpinus caroliniana*	Blue Beech	60mm cal/WB
		EVERGREEN TREES		
Pg	4	*Picea glauca*	White Spruce	2m ht WB
Ps	1	*Pinus strobus*	White Pine	2m ht WB
		DECIDUOUS SHRUBS		
Cs	7	*Cornus sericea*	Red Osier Dogwood	2 gal pot/60cm ht
Po	6	*Physocarpus opulifolius*	Common Ninebark	2 gal pot/60cm ht
		EVERGREEN SHRUBS		
Iv	7	*Ilex verticillata*	Winterberry	2 gal pot/60cm ht
		PERENNIALS & GRASS SPECIES		
Pv	3	*Panicum virgatum*	Switch Grass	2gal pot/60cm ht
Rf	7	*Rudbeckia fulgida*	Black-eyed Susan	1 gal pot/60cm ht

SEED MIX DETAIL

SWM POND MIX WET/DRY MIX

TYPE: OSC# 8245
STORMWATER POND MIX WET/DRY MIX
APPLIED BY HYDROSEED METHOD AT A RATE OF 500g/180m² OR 22-25kg / ha

CONTAINS:
BLACK EYED SUSAN (RUDBECKIA HIRTA),
CANADA WILD RYE (ELYMUS CANADENSIS),
FOX SEDGE (CAREX VULPINOIDEA),
INDIANGRASS (SORGHASTRUM NUTANS),
NEW ENGLAND ASTER (ASTER NOVAE-ANGLIAE),
SPOTTED JOE PYE WEED (EUPATORIUM MACULATUM),
SWITCHGRASS (PANICUM VIRGATUM),
VIRGINIA WILD RYE (ELYMUS VIRGINICUS),
WILD BERGAMOT (MONARTA FISTULOSA).

LOW MAINTENANCE
RETENTION BASIN NATIVE SEED MIXTURE

TYPE: OSC# 8220
APPLIED BY HYDROSEED METHOD AT A RATE OF 500g/180m² OR 22-25kg / ha

CONTAINS:
VIRGINIA WILD RYE (ELYMUS VIGINICUS),
TICKLEGRASS (AGROSTIS SCABRA),
FOX SEDGE (CAREX VULPINOIDEA),
FOWL BLUEGRASS (POA PALSUTRIS)

ADDITIONALLY:
TO APPLY NURSE CROP SUCH AS ELYMUS CANADENSIS ATA RATE OF 22-25kg/ha.

KEY PLAN NTS

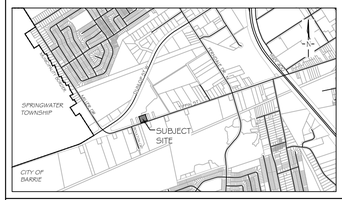

GENERAL NOTES

The Client and its contractors are responsible for all utility locates and confirming all setbacks, elevations, grades, etc. prior to installation of the constructed works. The Contractor is to report any discrepancies in writing to the Landscape Architect prior to proceeding with the works to determine the impact and suitability of the proposed works. The Landscape Architect will not be responsible for any unapproved adjustments on site. Construction of the works must conform to Authority requirements and applicable codes where they have jurisdiction.
All specifications and drawings are instruments of service and are the property and ownership of the Landmark Environmental Group Ltd. As such, the drawings shall not be modified or reproduced without the expressed written consent of Landmark Environmental Group Ltd. or they will be considered void. The said drawings are for Site Plan approval only and may require additional detailing prior to tender and construction. The Landmark Environmental Group Ltd. is not liable for errors or omissions from the use of these drawings prior to approval, seal, signature and date, and will be considered void.
It is advised that the Contractor contact the Landscape Architect prior to commencement of the construction works to ensure that the Contractor has the latest approved drawings. The Landmark Environmental Group Ltd. is not responsible for the accuracy of the base drawing information (eg Survey, Architectural, Engineering, etc). If there are any discrepancies, the Contractor will refer to the appropriate base drawing information and report discrepancies on the Landscape Drawings to the Landscape Architect.

© Copyright Landmark Environmental Group Ltd.

LEGEND

PROPOSED DECIDUOUS TREE
PROPOSED CONIFEROUS TREE
Bc 2 PLANT KEY
PROPOSED DECIDUOUS SHRUBS
PROPOSED EVERGREEN SHRUBS
PROPOSED PERENNIALS / GRASSES
EXISTING BOUNDARY TREES TO RETAIN
RESTORATION AREA LIMIT
NATURALIZATION AREA LIMIT
SOD AREAS (579m²)
SNOW STORAGE AREA (210m²)
GARDEN MULCH BED (3.2m²)
SEED AREAS (SWM POND NATIVE SEED MIX OSC# 8245, 148m²)
SEED AREAS (LOW MAINTENANCE RETENTION BASIN NATIVE SEED MIX OSC# 8220, 1,137m²)
STORAGE YARD (GRAVEL SURFACE BY OTHERS, 735m²)
PROJECT BOUNDARY
CHAIN LINK FENCE (P1211, 1.8m ht x 151m)
WOOD FENCE (P1208, 1.85m ht x 121m)
PROPOSED SWALE (BY OTHERS)

NO	DATE	BY	REVISIONS
7	JULY 29,2024	E.F	REVISIONS TO FENCING
6	JULY 19,2024	S.K	AS PER SITE PLAN UPDATES
5	JULY 6,2023	S.K	AS PER THE CITY COMMENTS
4	APRIL 14,2023	R.T	AS PER UPDATED GRADING
3	SEPT 23-22	R.T	AS PER SITE PLAN UPDATES
2	APRIL 20-22	S.K	AS PER SITE PLAN UPDATES & LANDSCAPE CONCEPT DEVELOPMENT
1	APRIL 07-22	B.B	AS PER NEW SITE PLAN

STAMP

ONTARIO ASSOCIATION OF LANDSCAPE ARCHITECTS
JAMES H. DOUGLAS
OALA
JULY 29 2024
MEMBER

APPROVAL

AERIAL (2023) COURTESY SIMCOE COUNTY GIS
SITE PLAN PROVIDED BY JONES CONSULTING GROUP LTD.
(PIO-21060-CP-12.DWG TRANS ON JULY 11, 2024)

LANDMARK ENVIRONMENTAL GROUP LTD
Landscape Architects Consulting Arborists Urban Forestry
LANDSCAPE ARCHITECTS & CONSULTING ARBORISTS
OFFICE: 705-796-1122
info@LEGroupLtd.com
www.LEGroupLtd.com

CLIENT: PIONEER POOLS

PROJECT: 518-524 TIFFIN STREET STORAGE YARD DEVELOPMENT

DRAWING: LANDSCAPE PLAN

SCALE BAR: 4m 0 4 8 12 — Scale = 1:200

PROJECT NO.: LA 656-22
SCALE: 1:200
MUNICIPAL FILE NO.: D28-082-2021
DATE: FEBRUARY 28, 2022
DRAWN BY: S.K
CHECKED BY: J.H
DRAWING No.: L-1

1. SIGNS MUST BE FABRICATED FROM WEATHER RESISTANT MATERIAL.
2. SIGNS ARE TO BE SECURELY FASTENED AND PLACED IN 50 METER INTERVALS ALONG ALL TREE PRESERVATION FENCING.
3. SIGNS MUST REMAIN POSTED FOR THE DURATION OF THE PROJECT OR UNTIL APPROVAL TO REMOVE PRESERVATION FENCING IS PROVIDED BY THE MUNICIPALITY.
4. ALL DIMENSIONS ARE IN MILLIMETRES.
5. THIS DETAIL IS TO BE USED IN CONJUNCTION WITH P1230 AND P1232.

Barrie	SIGN TREE PRESERVATION AREA	REV No. 2	DATE: APR 2023 SCALE: N.T.S.
		P1231	

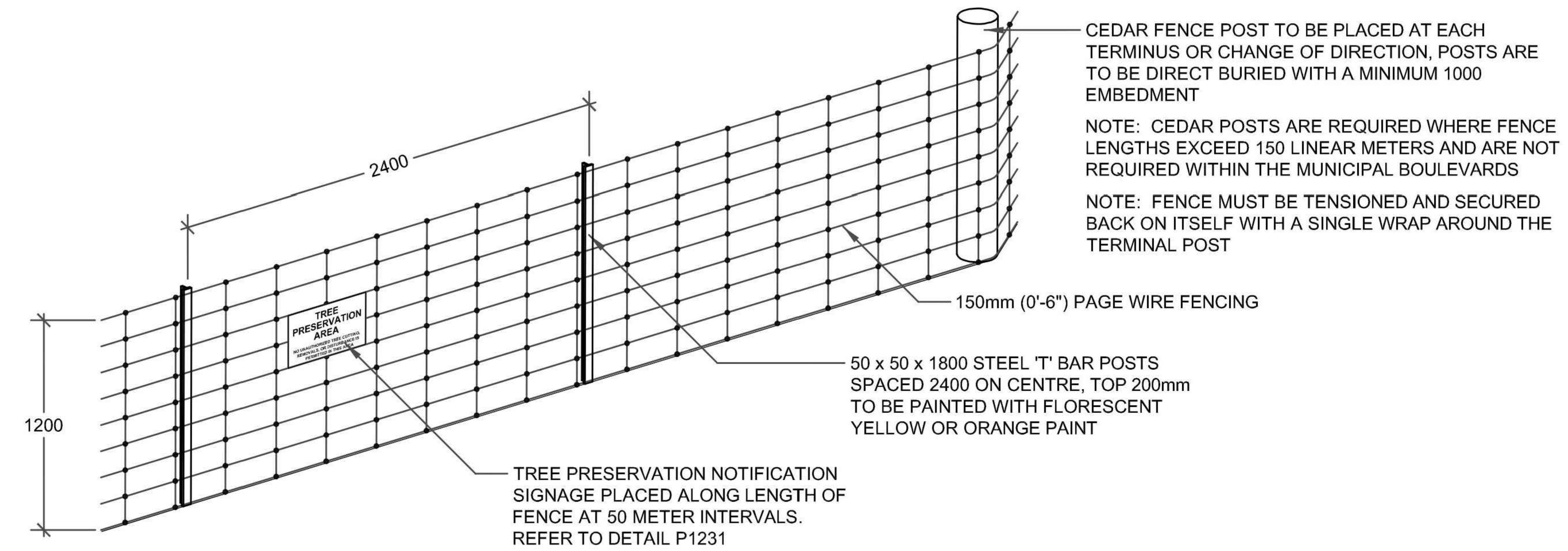

1. THIS DETAIL IS USED IN CONJUNCTION WITH P1233.
2. PAGE WIRE FENCE TO BE ATTACHED TO CEDAR RAIL POSTS WITH 'U' SHAPED GALVANIZED NAILS ON EACH HORIZONTAL STRAND.
3. USE A MINIMUM OF FOUR (4) 100MM, 16 GAUGE GALVANIZED T-POST CLIPS TO ATTACH PAGE WIRE FENCE TO EACH 'T' BAR POST.
4. 'T' BARS ARE TO BE DRIVEN INTO THE GROUND TO A MINIMUM DEPTH OF 600mm.
5. ALL MEASUREMENTS ARE IN MILLIMETRES UNLESS OTHERWISE NOTED.
6. THIS DETAIL TO BE USED IN CONJUNCTION WITH P1230, P1231, P1234 AND P1235.

Barrie	FENCE TREE PRESERVATION	REV No. 2	DATE: APR 2023 SCALE: N.T.S.
		P1232	

TREE PRESERVATION NOTES

1. THE INTENT OF THE TREE PRESERVATION PLAN IS TO PROVIDE PROTECTION AND PRESERVATION FOR EXISTING TREES ON THE SUBJECT PROPERTY. THEREFORE, ALL TREES ARE TO BE PRESERVED UNLESS OTHERWISE INDICATED IN THE PLAN OR THE ARBORIST'S REPORT. CONTACT THE LANDSCAPE ARCHITECT TO CONFIRM THE REMOVAL/RETENTION STATUS OF ANY TREES ON SITE, PRIOR TO CLEARING AND GRUBBING. THE OWNER WILL TAKE EVERY PRECAUTION TO PROTECT AND PRESERVE THE TREES APPROVED TO BE RETAINED IN ACCORDANCE WITH THE APPROVED PLANS.

2. PRIOR TO THE COMMENCEMENT OF ANY CLEARING, GRUBBING OR CONSTRUCTION WORKS, THE REQUIRED HOARDING WILL BE ERECTED OUTSIDE OF THE OUTERMOST DRIPLINE OF ANY TREE TO BE RETAINED, IN ACCORDANCE WITH THE HOARDING DETAIL, AND TO THE SATISFACTION OF THE LANDSCAPE ARCHITECT. ERECTION OF ANY PROTECTION FENCING SHALL BE UNDER THE DIRECTION OF THE LANDSCAPE ARCHITECT.

3. IT IS THE RESPONSIBILITY OF THE CONTRACTOR TO ERECT AND MAINTAIN ALL HOARDING AS PER THE APPROVED DETAIL, PRESERVATION NOTES AND LOCATIONS SHOWN ON THE DRAWINGS.

4.NO STORAGE OF EQUIPMENT OR VEHICLES, NOR ANY STOCKPILING OF MATERIAL IS TO OCCUR WITHIN THE AREA OF PRESERVATION/PROTECTION. TREES SLATED FOR PROTECTION WILL NOT BE USED FOR RIGGING OR WRAPPING. THE PROTECTION/PRESERVATION AREA SHALL NOT BE USED TO EMPTY CONTAMINANTS, REFUELING OR REPAIR OF VEHICLES OR EQUIPMENT.

5. TREES LOCATED ON THE IMMEDIATE EDGE OF THE CONSTRUCTION WORKS ARE TO BE PRUNED IN THE INTEREST OF SAFETY, IN ACCORDANCE WITH APPROVED ARBORICULTURAL PRACTICES.

6. TREE LOCATIONS ARE APPROXIMATE AND THEREFORE VERIFICATION ON SITE IS REQUIRED.

7. SHOULD A TREE REQUIRED TO BE PROTECTED BECOME DAMAGED OR REMOVED WITHOUT WRITTEN PERMISSION OF THE CITY OF BARRIE OR THE LANDSCAPE ARCHITECT, THE CONTRACTOR OR OWNER WILL BE RESPONSIBLE FOR REPLACEMENT OF THE TREE OF EQUAL CALIPER AND ACCEPTABLE TREE SPECIES AT THE DISCRETION AND SATISFACTION OF THE LANDSCAPE ARCHITECT.

8. THE WORK COMPLETED BY THE CONTRACTOR WILL NOT CAUSE OR EXACERBATE FLOODING CONDITIONS OR CAUSE SEDIMENT BUILDUP OVER THE ROOTZONE OF PROTECTED TREES. NO GRADING SHALL TAKE PLACE WITHIN THE TREE PRESERVATION AREA UNLESS OTHERWISE APPROVED BY THE LANDSCAPE ARCHITECT.

9. ANY REQUIRED LIMB TRIMMING SHALL BE UNDER THE DIRECT SUPERVISION OF THE LANDSCAPE ARCHITECT OR A QUALIFIED ARBORIST.

10. PRESERVATION FENCING TO BE INSTALLED IN ACCORDANCE WITH THE APPROVED DETAIL. FILTER FABRIC TO BE INSTALLED IN CONJUNCTION WITH THE APPROVED ENGINEERING DRAWINGS.

11. HOARDING/TREE PRESERVATION MAY BE COMPLETED IN CONJUNCTION WITH SEDIMENTATION CONTROL.

LANDMARK ENVIRONMENTAL GROUP LTD
Landscape Architects
Consulting Arborists
Urban Forestry

1. THE DRIP LINE IS MEASURED FROM THE OUTER MOST LIMIT OF BRANCHING WITHIN THE CROWN OF THE TREE. THE FURTHEST DISTANCE SHALL APPLY TO THE ENTIRE PERIMETER OF THE CROWN.
2. WHEN CONSTRUCTION AND/OR REMOVALS ARE LIMITED TO ONE SIDE OF A TREE AND/OR GROUP OF TREES THE LIMIT OF PRESERVATIONS SHALL BE DETERMINED BY THE DRIP LINE. IN THE EVENT THAT INDIVIDUAL TREES ARE BEING PRESERVED WHERE MORE THAN 1/3 OF THE ROOT ZONE WILL BE DISTURBED THE LIMIT OF PRESERVATION SALL BE 1.5 TO 2 TIMES THE LIMIT OF CANOPY OR AS DIRECTED BY THE CITY OF BARRIE.
3. PRESERVATION FENCING TO BE INSTALLED AS PER BSD-1232, THE APPLICATION OF FILTER FABRIC IS ONLY REQUIRED WHEN FENCING DOUBLES AS SILTATION CONTROL AS PER P1233.
4. NOTICE OF REMOVAL SIGNAGE IS TO BE PLACED AT 50m INTERVALS AS PER P1230.
5. THERE IS TO BE NO GRADING, CONSTRUCTION OF SWALES, CATCH BASINS OR OTHER DRAINAGE CONTROLS PLACED WITHIN THE LIMIT OF PRESERVATION.
6. WITHIN THE DEFINED LIMIT OF PRESERVATION THERE WILL BE:
   - NO CHANGE OF ALTERATION TO EXISTING GRADES
   - NO TRENCHING
   - NO REMOVAL OF UNDER STORY VEGETATION
   - NO ADDITION OF FILL OF EXCAVATIONS
   - NO STORAGE OF MATERIALS OR EQUIPMENT
   - NO DISPOSAL OF ANY LIQUIDS i.e. GAS, PAINT, OIL
   - NO INTRUSION BY VEHICLES OR EQUIPMENT
   - NO INTRUSION BY PEDESTRIANS
   - NO MANHOLES OR OTHER INFRASTRUCTURE INCLUDING UTILITIES.
7. THE LOCATION OF THE PROPERTY LIMIT IS NOT SHOWN IN THIS DETAIL AS IT IS NOT RELEVANT TO THE ESTABLISHMENT OF PRESERVATION LIMITS OR ASSOCIATED SETBACK REQUIREMENTS.

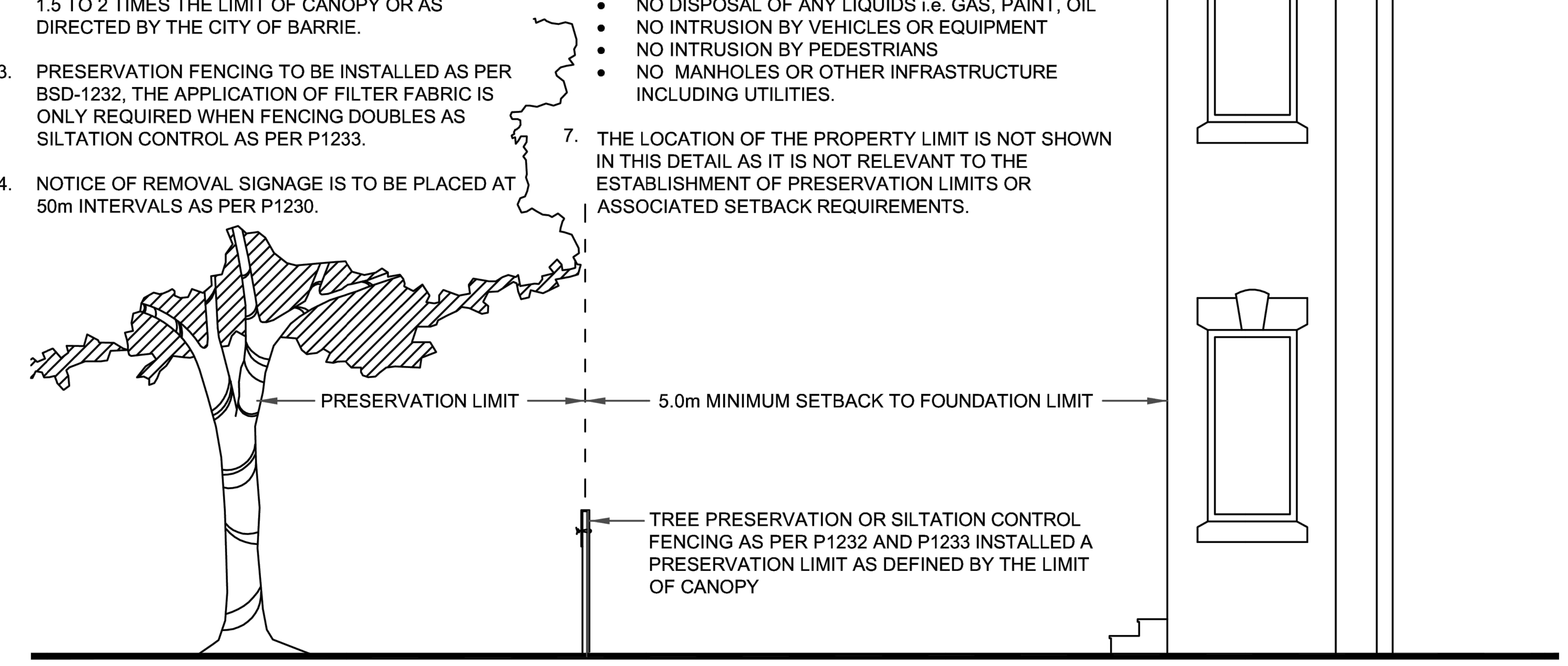

Barrie	TREE PRESERVATION LIMIT DEVELOPMENT APPROVALS	REV No. 2	DATE: APR 2023 SCALE: N.T.S.
		P1235	

KEY PLAN NTS

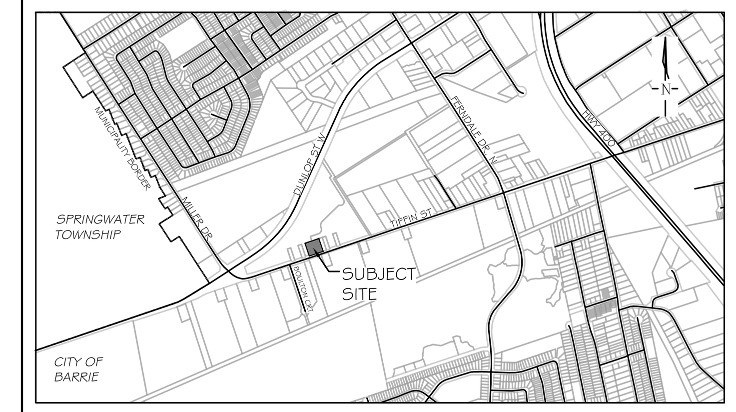

GENERAL NOTES

The Client and its contractors are responsible for all utility locates and confirming all setbacks, elevations, grades, etc. prior to installation of the constructed works.
The Contractor is to report any discrepancies in writing to the Landscape Architect prior to proceeding with the works to determine the impact and suitability of the proposed works. The Landscape Architect will not be responsible for any unapproved adjustments on site. Construction of the works must conform to Authority requirements and applicable codes where they have jurisdiction.
All specifications and drawings are instruments of service and are the property and ownership of the Landmark Environmental Group Ltd. As such, the drawings shall not be modified or reproduced without the expressed written consent of Landmark Environmental Group Ltd. or they will be considered void. The said drawings are for Site Plan approval only and may require additional detailing prior to tender and construction. The Landmark Environmental Group Ltd. is not liable for errors or omissions from the use of these drawings prior to approval, seal, signature and date, and will be considered void.
It is advised that the Contractor contact the Landscape Architect prior to commencement of the construction works to ensure that the Contractor has the latest approved drawings. The Landmark Environmental Group Ltd. is not responsible for the accuracy of the base drawing information (eg Survey, Architectural, Engineering, etc). If there are any discrepancies, the Contractor will refer to the appropriate base drawing information and report discrepancies on the Landscape Drawings to the Landscape Architect.

© Copyright Landmark Environmental Group Ltd.

LEGEND

NO	DATE	BY	REVISIONS
7	JULY 29,2024	E.F	REVISIONS TO FENCING
6	JULY 19,2024	S.K	AS PER SITE PLAN UPDATES
5	JULY 6,2023	S.K	AS PER THE CITY COMMENTS
4	APRIL 14,2023	R.T	AS PER UPDATED GRADING
3	SEPT 23-22	R.T	AS PER SITE PLAN UPDATES
2	APRIL 20-22	S.K	AS PER SITE PLAN UPDATES & LANDSCAPE CONCEPT DEVELOPMENT
1	APRIL 07-22	B.B	AS PER NEW SITE PLAN

STAMP

APPROVAL

AERIAL (2023) COURTESY SIMCOE COUNTY GIS
SITE PLAN PROVIDED BY JONES CONSULTING GROUP LTD.
(PIO-21060-CP-12.DWG TRANS ON JULY 11, 2024)

LANDMARK ENVIRONMENTAL GROUP LTD
Landscape Architects
Consulting Arborists
Urban Forestry
LANDSCAPE ARCHITECTS
& CONSULTING ARBORISTS
OFFICE: 705-796-1122
info@LEGroupLtd.com
www.LEGroupLtd.com

CLIENT: PIONEER POOLS

PROJECT: 518-524 TIFFIN STREET STORAGE YARD DEVELOPMENT

DRAWING: DETAILS 1

SCALE BAR:

PROJECT NO.: LA 656-22	SCALE: N.T.S
MUNICIPAL FILE NO.: D28-082-2021	DATE: FEBRUARY 28, 2022
DRAWN BY: L.O/B.B CHECKED BY: J.H	DRAWING No.: LD-1

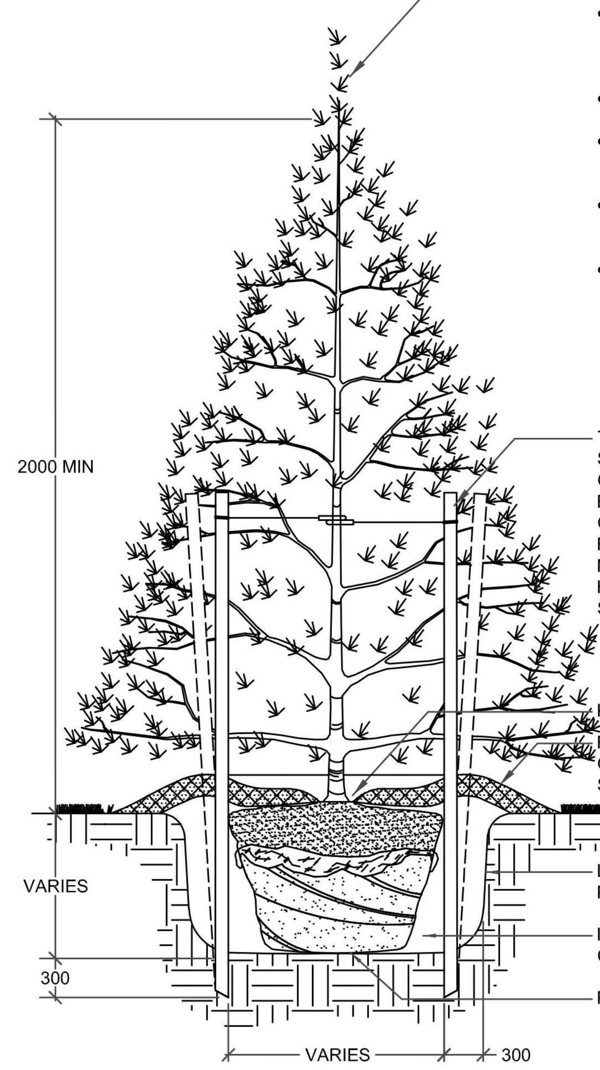

TREE CROWN NOTES:

- REMOVE AT TIME OF PLANTING ANY DEAD, BROKEN OR DAMAGED LIMBS INCLUDING INTERFERING BRANCHES, DOUBLE LEADERS AND NARROW BRANCH UNIONS
- REMOVE ALL LABELS AND TAGS AT TIME OF PLANTING
- BINDING AND TIES MUST BE REMOVED IMMEDIATELY FOLLOWING THE INSTALLATION OF THE TREE
- TREE HEIGHT IS MEASURED FROM THE FIRST WHORL AND NOT THE TOP OF LEADER
- TREES ARE TO BE PLANTED PLUM AND HAVE BOTH FULL FORM AND HEALTHY CANOPY STRUCTURE. ANY TREES WHICH DO NOT MEET THIS CRITERIA AND/OR HAVE WEAK BRANCHING STRUCTURE, DO NOT HAVE STRAIGHT TRUNKS OR HAVE UNBALANCED CROWNS WILL NOT BE ACCEPTED

1. ALL CONIFEROUS TREE PLANTING SHALL HAVE A MINIMUM 600mm DIAMETER ROOT BALL.
2. CUT AND REMOVE ALL WIRE, ROPE AND BURLAP FROM THE TOP 150mm OF THE ROOT BALL AT THE TIME OF PLANTING.
3. FOR POORLY DRAINED OR COMPACTED SOILS THE ROOT BALL SHALL BE PLACED SO THAT THE ROOT COLLAR IS A MAXIMUM OF 100mm ABOVE THE FINISHED GRADE. FOR ALL OTHER INSTALLATIONS THE ROOT COLLAR SHALL BE AT OR 50mm ABOVE FINISHED GRADE.
4. ALL TWINE AND BURLAP MUST BE BIODEGRADABLE (UNTREATED).
5. ALL DIMENSIONS ARE IN MILLIMETRES UNLESS OTHERWISE NOTED.

Barrie	CONIFEROUS TREE PLANTING	REV No. 5	DATE: APR 2023 / SCALE: N.T.S.	P1312

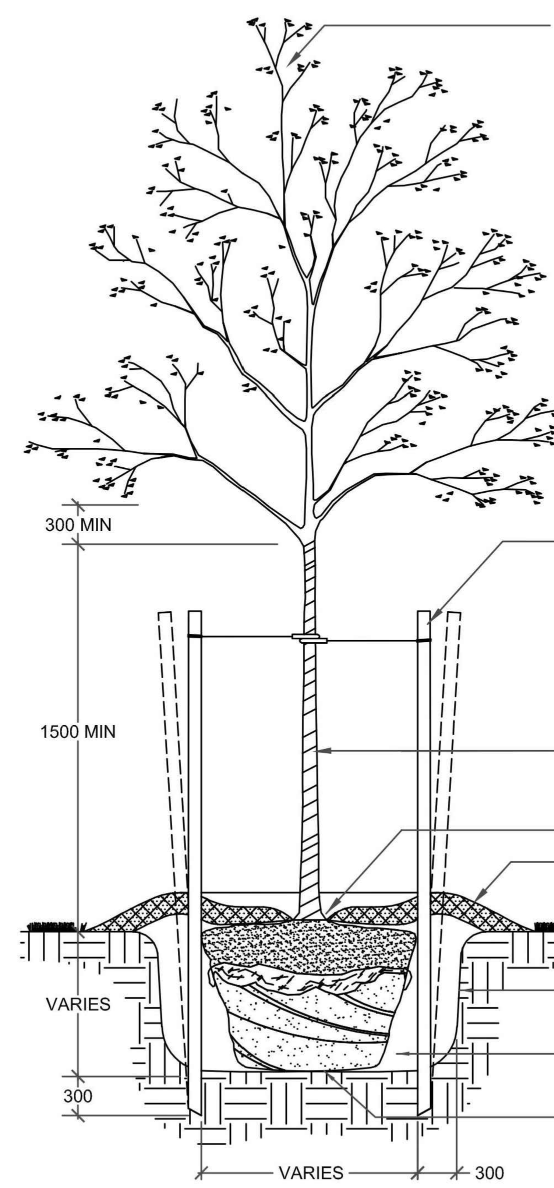

TREE CROWN NOTES:

- REMOVE AT TIME OF PLANTING ANY DEAD, BROKEN OR DAMAGED LIMBS INCLUDING INTERFERING BRANCHES, DOUBLE LEADERS AND NARROW BRANCH UNIONS
- REMOVE ALL LABELS AND TAGS AT TIME OF PLANTING
- TREES ARE TO BE PLANTED PLUM AND HAVE BOTH FULL FORM AND HEALTHY CANOPY STRUCTURE. ANY TREES WHICH DO NOT MEET THIS CRITERIA AND/OR HAVE WEAK BRANCHING STRUCTURE, DO NOT HAVE STRAIGHT TRUNKS OR HAVE UNBALANCED CROWNS WILL NOT BE ACCEPTED

1. ALL CALIPER TREE PLANTING SHALL HAVE A MINIMUM 600mm DIAMETER ROOT BALL.
2. CUT AND REMOVE ALL WIRE, ROPE AND BURLAP FROM THE TOP 150mm OF THE ROOT BALL AT THE TIME OF PLANTING.
3. FOR POORLY DRAINED OR COMPACTED SOILS THE ROOT BALL SHALL BE PLACED SO THAT THE ROOT COLLAR IS A MAXIMUM OF 100mm ABOVE THE FINISHED GRADE. FOR ALL OTHER INSTALLATIONS THE ROOT COLLAR SHALL BE AT OR 50mm ABOVE FINISHED GRADE.
4. ALL TREES WITHIN 3.0m OF A SIDEWALK OR DRIVEWAY MUST ALSO HAVE A COORDINATED INSTALLATION OF AN APPROVED ROOT BARRIER INSTALLED IN ADDITION TO THE TREE FOR ALL STREETSCAPE APPLICATIONS.
5. ALL TWINE AND BURLAP MUST BE BIODEGRADABLE (UNTREATED).
6. ALL DIMENSIONS ARE IN MILLIMETRES UNLESS OTHERWISE NOTED.

Barrie	DECIDUOUS TREE PLANTING	REV No. 5	DATE: APR 2023 / SCALE: N.T.S.	P1310

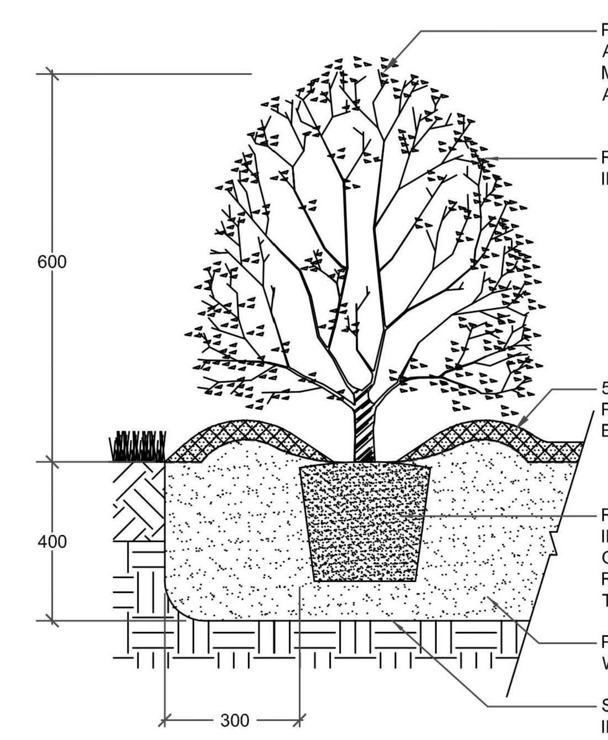

1. PLANTING METHOD ILLUSTRATED APPLIES TO CONTAINER / POTTED MATERIAL ONLY.
2. PLANTING DETAIL DOES NOT SPECIFICALLY RELATE TO ANY PARTICULAR SPECIES AND SHALL BE APPLIED TO BOTH DECIDUOUS AND CONIFEROUS POTTED MATERIAL.
3. SET SHRUBS 50mm HIGHER THAN GRADE TO ALLOW FOR SETTLEMENT.
4. ALL SHRUB PLANTING IS TO OCCUR IN CONTINUOUS MULCHED PLANTING BEDS WITH WEED CONTROL /FILTER FABRIC.
5. DO NOT COVER THE BASE OF SHRUB WITH MULCH.
6. ALL SOIL SHALL BE ADEQUATELY COMPACTED TO PREVENT AIR POCKETS AND SETTLEMENT.
5. ALL DIMENSIONS ARE IN MILLIMETRES UNLESS OTHERWISE NOTED.

Barrie	CONTAINER GROWN SHRUB PLANTING	REV No. 5	DATE: APR 2023 / SCALE: N.T.S.	P1314

PLANTING NOTES

1. The Contractor shall review all information in all drawings details and specifications and report any discrepancies to the Landscape Architect in writing prior to commencement of works.
2. All planting and related work shall be completed by experienced personnel under the direction and supervision of a qualified foreman.
3. All plant material which cannot be planted immediately will be properly heeled in or covered with a similar material which will keep root surfaces moist until planted.
4. All plant material and operations shall meet or exceed current horticultural standards of the Canadian Nursery Landscape Association. All plant material to be No. 1 Grade Nursery Stock. All unsatisfactory stock including field grown will be refused on site.
5. The Landscape Architect reserves the right to reject any material, plantings and sod prior to or after installation which does not conform to approved specifications in accordance with approved details. The Contractor will be asked to remove any unapproved material which does not conform to specifications unless there is prior written agreement with the Landscape Architect.
6. Trees and shrubs shall have an uncut, strong central leader, be sound, healthy, vigorous, well-branched, densely foliated, free of disease, insects and have well-developed root systems.
7. Where applicable, sod to be Canada No. 1 Nursery Sod, meeting Ontario Sod Growers Association Standards. All Areas to receive 200mm minimum depth of topsoil under sod unless otherwise indicated. See Drawings and Specifications for areas to be mulched.
8. The Contractor shall stake out all planting locations for approval by the Landscape Architect or Contract Administrator prior to planting. Where dimensions are not provided, the drawing may be scaled ONLY to determine approximate locations of plant material. Dimensions are in millimeters unless otherwise stated.
9. All mass plantings shall be in continuous beds with mulch as specified in planting details.
10. All planting will be under warrantee by the Contractor for a minimum of 2 years. The Contractor shall water at time of planting and whenever deemed necessary to maintain trees in a healthy condition. Apply aqueous fertilizer in a ratio of 10-6-4 in accordance with manufacturers instructions. Sod, where specified, to be maintained and guaranteed until the end of warrantee period, minimum after two mowings.
11. Unwrap or do not wrap tree trunks. Stake trees in accordance with required specifications.
12. Provide sufficient rodent protection on all new planting so as to deter bark or shoot damage by rodents. Significant rodent damage, as determined by the Landscape Architect will require plant replacement.

LANDMARK ENVIRONMENTAL GROUP LTD
Landscape Architects
Consulting Arborists
Urban Forestry

KEY PLAN NTS

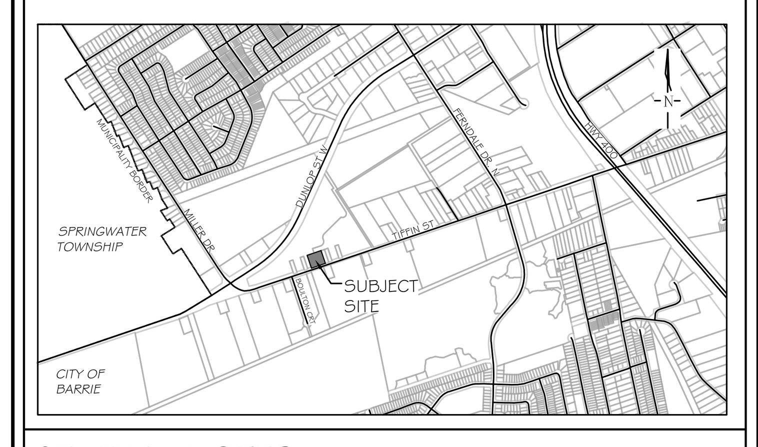

GENERAL NOTES

The Client and its contractors are responsible for all utility locates and confirming all setbacks, elevations, grades, etc. prior to installation of the constructed works.
The Contractor is to report any discrepancies in writing to the Landscape Architect prior to proceeding with the works to determine the impact and suitability of the proposed works. The Landscape Architect will not be responsible for any unapproved adjustments on site. Construction of the works must conform to Authority requirements and applicable codes where they have jurisdiction.
All specifications and drawings are instruments of service and are the property and ownership of the Landmark Environmental Group Ltd. As such, the drawings shall not be modified or reproduced without the expressed written consent of Landmark Environmental Group Ltd. or they will be considered void. The said drawings are for Site Plan approval only and may require additional detailing prior to tender and construction. The Landmark Environmental Group Ltd. is not liable for errors or omissions from the use of these drawings prior to approval, seal, signature and date, and will be considered void.
It is advised that the Contractor contact the Landscape Architect prior to commencement of the construction works to ensure that the Contractor has the latest approved drawings. The Landmark Environmental Group Ltd. is not responsible for the accuracy of the base drawing information (eg Survey, Architectural, Engineering, etc). If there are any discrepancies, the Contractor will refer to the appropriate base drawing information and report discrepancies on the Landscape Drawings to the Landscape Architect.

© Copyright Landmark Environmental Group Ltd.

LEGEND

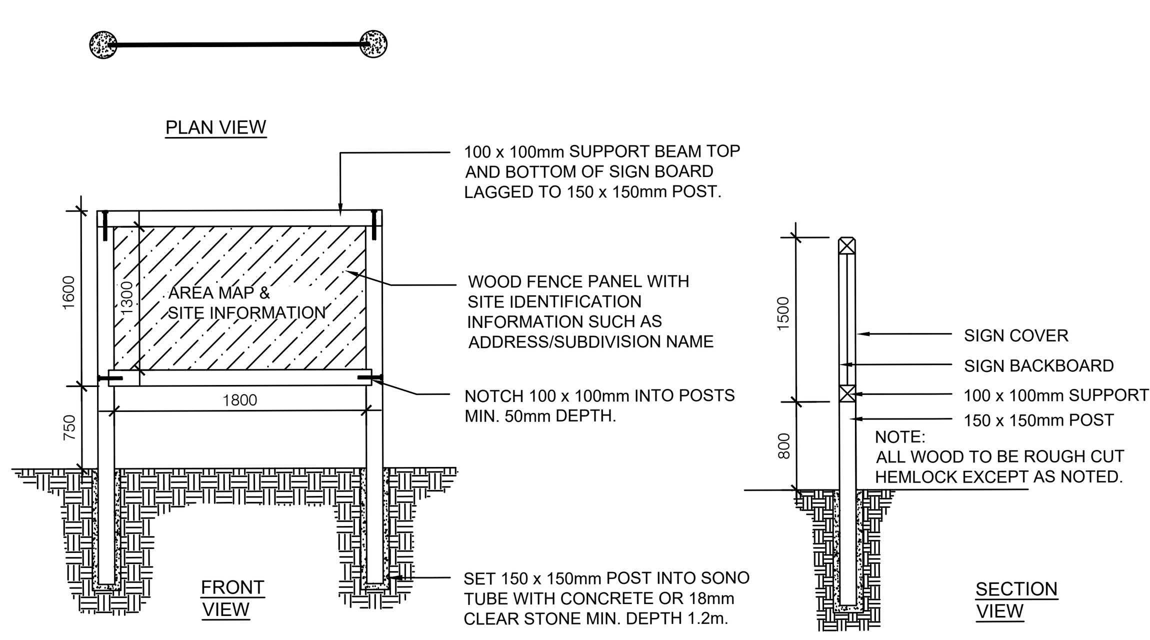

LANDMARK ENVIRONMENTAL GROUP LTD — SITE IDENTIFICATION SIGN — NOT TO SCALE

REVIEWED: J.H.	DATE: APR13/2021
DRAWN: S.K	SCALE: N.T.S.

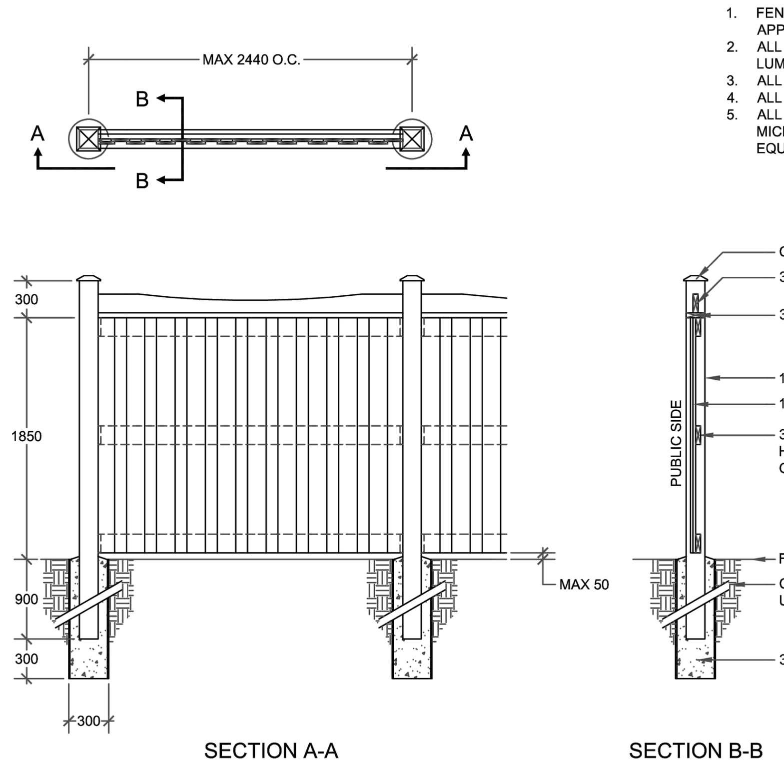

1. FENCE LOCATIONS AND DIMENSIONS MUST BE IN ACCORDANCE WITH APPROVED LANDSCAPE PLANS.
2. ALL WOOD TO BE SELECT, TIGHT KNOT GRADE AS PER THE NATIONAL LUMBER GRADES AUTHORITY.
3. ALL DIMENSIONS ARE IN MILLIMETRES UNLESS NOTED.
4. ALL HARDWARE TO BE HOT DIP GALVANIZED.
5. ALL LUMBER TO BE PRETREATED WITH AN APPROVED BROWN, MICRONIZED COPPER WOOD PRESERVATIVE OR APPROVED EQUIVALENT IN PLACE OF STAIN APPLICATION.

Barrie	FENCE NON-RESIDENTIAL TO RESIDENTIAL	REV No. 2	DATE: APR 2023 / SCALE: N.T.S.	P1208

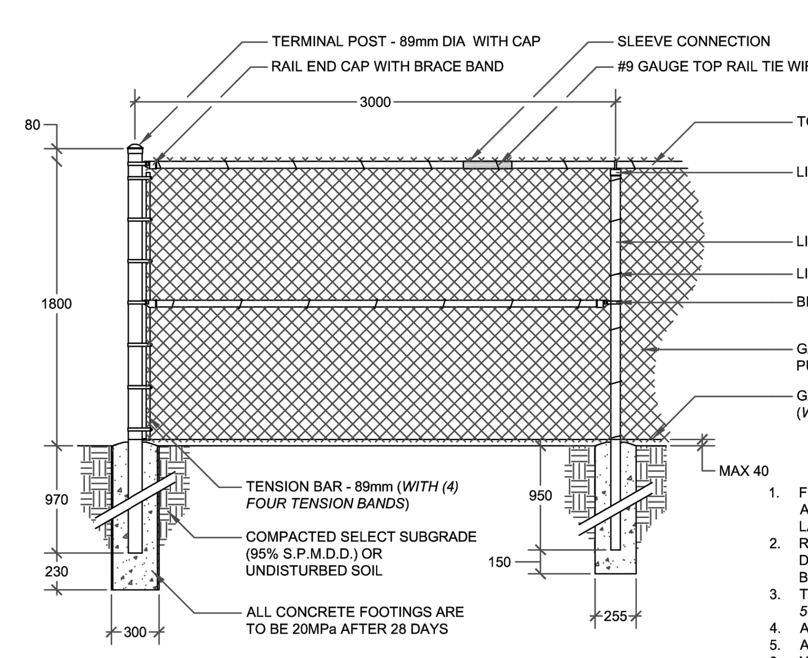

1. FENCE LOCATIONS AND DIMENSIONS MUST BE IN ACCORDANCE WITH APPROVED ENGINEERING AND/OR LANDSCAPE PLANS.
2. RUNS FOR FENCING OF MORE THAN 150m ARE TO HAVE A 89mm DIA INTERMEDIATE STRAINING POST AND (2) TWO 42.9mm DIA BRACE RAILS SIMILAR TO THOSE USED FOR TERMINAL POSTS.
3. TIE WIRES - #9 GAUGE HARD ALUMINUM (REFERENCE 5052-H18-ASTM-BS11 FASTENERS).
4. ALL DIMENSIONS ARE IN MILLIMETRES UNLESS NOTED.
5. ALL HARDWARE TO BE HOT DIP GALVANIZED.
6. NO GATES ARE PERMITTED FROM PROPERTY.
7. ONLY USE SCHEDULE 40 GALVANIZED PIPE.
8. FENCING TO BE INSTALLED SOLELY ON MUNICIPAL PROPERTY WITH AN INSET OF 150 TO FENCE CENTRE LINE.
9. THE TOP OF WIRE MESH SHALL BE KNUCKLED OVER SUCH THAT NO SHARP PROJECTIONS ARE VISIBLE OVER THE TOP RAIL.

Barrie	FENCE 1.80m CHAIN LINK	REV No. 2	DATE: APR 2023 / SCALE: N.T.S.	P1211

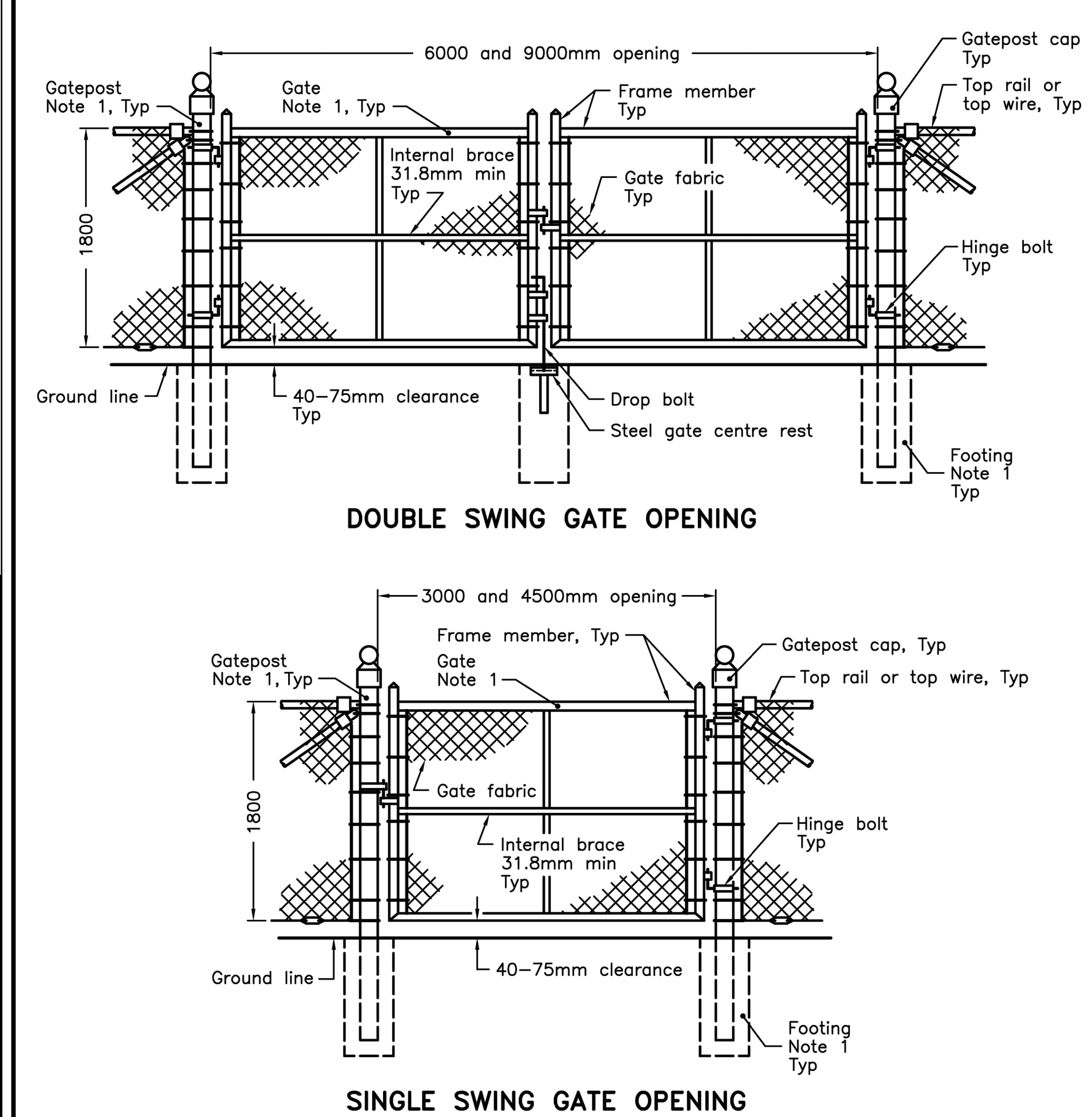

NOTES:
1 For footing details and Gate and Gatepost Details Table refer to OPSD 972.132.
A Gates as viewed from the roadway.
B All dimensions are in millimetres unless otherwise shown.

ONTARIO PROVINCIAL STANDARD DRAWING	Nov 2012	Rev 2
FENCE, CHAIN-LINK COMPONENT – GATE	OPSD 972.102	

NO	DATE	BY	REVISIONS
7	JULY 29,2024	E.F	REVISIONS TO FENCING
6	JULY 19,2024	S.K	AS PER SITE PLAN UPDATES
5	JULY 6,2023	S.K	AS PER THE CITY COMMENTS
4	APRIL 14,2023	R.T	AS PER UPDATED GRADING
3	SEPT 23-22	R.T	AS PER SITE PLAN UPDATES
2	APRIL 20-22	S.K	AS PER SITE PLAN UPDATES & LANDSCAPE CONCEPT DEVELOPMENT
1	APRIL 07-22	B.B	AS PER NEW SITE PLAN

STAMP: ONTARIO ASSOCIATION OF LANDSCAPE ARCHITECTS — JAMES J. MOSLEY — OALA — JULY 29 2024 — MEMBER

APPROVAL

AERIAL (2023) COURTESY SIMCOE COUNTY GIS
SITE PLAN PROVIDED BY JONES CONSULTING GROUP LTD.
(PIO-21060-CP-12.DWG TRANS ON JULY 11, 2024)

LANDMARK ENVIRONMENTAL GROUP LTD
Landscape Architects
Consulting Arborists
Urban Forestry
LANDSCAPE ARCHITECTS & CONSULTING ARBORISTS
OFFICE: 705-796-1122
info@LEGroupLtd.com
www.LEGroupLtd.com

CLIENT: PIONEER POOLS

PROJECT: 518-524 TIFFIN STREET STORAGE YARD DEVELOPMENT

DRAWING: DETAILS 2

SCALE BAR:

PROJECT NO.: LA 656-22	SCALE: N.T.S
MUNICIPAL FILE NO.: D28-082-2021	DATE: FEBRUARY 28, 2022
DRAWN BY: CHECKED BY: J.H	DRAWING No.: LD-2