1. THE CONTRACTOR SHALL REVIEW ALL INFORMATION IN THE DRAWINGS, DETAILS AND SPECIFICATIONS FOR THIS PROJECT, AND REPORT ANY DISCREPANCY OR SUBSTITUTION TO THE CONTRACT ADMINISTRATOR IN WRITING PRIOR TO COMMENCEMENT OF WORK.
2. ALL PLANTING MATERIAL AND OPERATIONS TO MEET OR EXCEED THE HORTICULTURAL STANDARDS OF THE CANADIAN NURSERY LANDSCAPE ASSOCIATION AND LANDSCAPE ONTARIO. ALL PLANT MATERIAL TO BE No.1 GRADE NURSERY STOCK. THE CITY OF BARRIE RETAINS THE RIGHT TO REFUSE ANY UNSATISFACTORY STOCK.
3. SOD TO BE CANADA No.1 NURSERY SOD, MEETING THE NURSERY SOD GROWERS ASSOCIATION OF ONTARIO STANDARDS. ALL AREAS TO RECEIVE A MINIMUM 200mm DEPTH OF TOPSOIL AND SOD UNLESS OTHERWISE INDICATED. SEE DRAWINGS AND SPECIFICATIONS FOR AREAS TO BE MULCHED OR HYDRO-SEEDED.
4. CONIFEROUS TREES SHALL HAVE A STRAIGHT CENTRAL LEADER AND DENSELY BRANCHED TO WITHIN 300mm OF THE TOP OF ROOT BALL. HEIGHT OF CONIFEROUS TREES IS DEFINED AS THE DISTANCE BETWEEN THE TOP OF ROOT BALL AND THE FIRST WURL (NOT LEADER HEIGHT), REFER TO BSD-1312 AND BSD-1313.
5. THE CONTRACTOR SHALL VERIFY THE LOCATION OF ALL UTILITIES AND IS RESPONSIBLE FOR ANY DAMAGE TO SERVICES, EXISTING VEGETATION, OR ANY OTHER FEATURES TO BE RETAINED.
6. THE CONTRACTOR SHALL STAKE OUT ALL PLANTING LOCATIONS FOR APPROVAL BY THE CONTRACT ADMINISTRATOR, AND/OR CITY STAFF PRIOR TO PLANTING.
7. FOR ALL LANDSCAPE PLANS, ALL DIMENSIONS ARE TO BE SHOWN IN MILLIMETRES UNLESS OTHERWISE INDICATED.
8. ALL MASS PLANTINGS OF CONIFERS AND SHRUBS SHALL BE IN CONTINUOUS BEDS AND MULCHED WITH SHREDDED CEDAR OR APPROVED EQUIVALENT.
9. SCHEDULE AND PERFORM OPERATIONS FOR OPTIMUM PLANTING CONDITIONS, AND TAKE WHATEVER MEASURES NECESSARY TO ENSURE HEALTHY, VIGOROUS GROWTH.
10. ALL PLANT MATERIAL AND WORKMANSHIP WILL BE INSPECTED AND IS UNDER WARRANTY FOR A MINIMUM OF TWO YEARS FROM THE DATE OF WRITTEN ACCEPTANCE. ALL PLANT MATERIAL MUST BE IN A HEALTHY, VIGOROUS GROWING CONDITION SATISFACTORY TO THE CONTRACT ADMINISTRATOR AT THE END OF THE WARRANTY PERIOD, OR TO BE REPLACED AT THE CONTRACTOR'S EXPENSE.
11. WATER AT TIME OF PLANTING AND WHENEVER DEEMED NECESSARY TO MAINTAIN THE TREES IN A HEALTHY CONDITION.
12. INSTALLATION OF THE PLANT MATERIAL PRIOR TO INSPECTION BY THIS CITY OF BARRIE WILL BE THE CONTRACTOR'S RESPONSIBILITY. THE CITY OF BARRIE RESERVES THE RIGHT TO REJECT ANY PLANTS, WHETHER INSTALLED OR NOT, WHICH DO NOT CONFORM TO THE SPECIFICATIONS AND/OR SITE DRAWING(S). REMOVE ALL REJECTED PLANTS FROM THE SITE IMMEDIATELY. DO NOT REMOVE ANY LABELS FROM PLANTS UNTIL THE PLANTS HAVE BEEN INSPECTED AND APPROVED BY THE LANDSCAPE ARCHITECT.
13. ALL PLANT MATERIALS WHICH CANNOT BE PLANTED IMMEDIATELY UPON ARRIVAL ON SITE SHALL BE PROPERLY HEELED IN OR WELL PROTECTED WITH SOIL OR SIMILAR MATERIALS TO PREVENT DRYING OUT, AND SHALL BE KEPT MOIST UNTIL COMMENCEMENT OF PLANTING.
14. ALL NEW WORK TO BLEND NEATLY AND SMOOTHLY WITH EXISTING CONDITIONS.
15. NO GRADING OR SODDING SHALL BE DONE WITHIN THE LIMIT OF PRESERVATION AREAS.
16. IN THE EVENT OF A DISCREPANCY BETWEEN A PLANT LIST AND DRAWING, THE DRAWING WILL BE ASSUMED TO BE CORRECT.

The City of BARRIE STANDARD DETAIL | GENERAL PARK PLANTING NOTES | REV No. 1 | DATE: JUNE 2015 | SCALE: N.T.S. | BSD-1320 FORMERLY BSD-N8 | APPROVED DATE June 11/15 DIRECTOR OF ENGINEERING

1 / L-2 LANDSCAPE SPECIFICATIONS

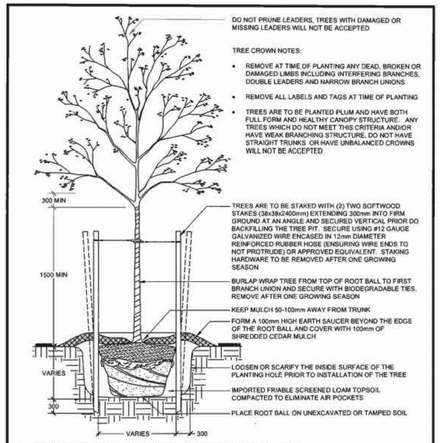

1. ALL CALIPER TREE PLANTING SHALL HAVE A MINIMUM 600mm DIAMETER ROOT BALL.
2. CUT AND REMOVE ALL WIRE, ROPE AND BURLAP FROM THE TOP 150mm OF THE ROOT BALL AT THE TIME OF PLANTING.
3. FOR POORLY DRAINED OR COMPACTED SOILS THE ROOT BALL SHALL BE PLACED SO THAT THE ROOT COLLAR IS A MAXIMUM OF 100mm ABOVE THE FINISHED GRADE. FOR ALL OTHER INSTALLATIONS THE ROOT COLLAR SHALL BE AT OR 50mm ABOVE FINISHED GRADE.
4. ALL TREES WITHIN 3.0m OF A SIDEWALK OR DRIVEWAY MUST ALSO HAVE A COORDINATED INSTALLATION OF AN APPROVED ROOT BARRIER INSTALLED IN ADDITION TO THE TREE FOR ALL STREETSCAPE APPLICATIONS.
5. ALL TWINE AND BURLAP MUST BE BIODEGRADABLE (UNTREATED).
6. ALL DIMENSIONS ARE IN MILLIMETRES UNLESS OTHERWISE NOTED.

The City of BARRIE STANDARD DETAIL | DECIDUOUS TREE PLANTING DETAIL | REV No. 4 | DATE: JUNE 2015 | SCALE: N.T.S. | BSD-1310 FORMERLY BSD-29 | APPROVED DATE June 11/15 DIRECTOR OF ENGINEERING

2 / L-2 DECIDUOUS TREE PLANTING

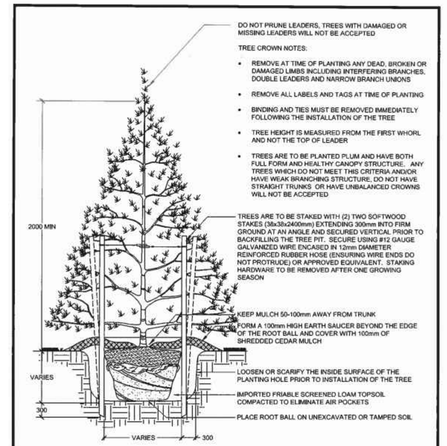

1. ALL CONIFEROUS TREE PLANTING SHALL HAVE A MINIMUM 600mm DIAMETER ROOT BALL.
2. CUT AND REMOVE ALL WIRE, ROPE AND BURLAP FROM THE TOP 150mm OF THE ROOT BALL AT THE TIME OF PLANTING.
3. FOR POORLY DRAINED OR COMPACTED SOILS THE ROOT BALL SHALL BE PLACED SO THAT THE ROOT COLLAR IS A MAXIMUM OF 100mm ABOVE THE FINISHED GRADE. FOR ALL OTHER INSTALLATIONS THE ROOT COLLAR SHALL BE AT OR 50mm ABOVE FINISHED GRADE.
4. ALL TWINE AND BURLAP MUST BE BIODEGRADABLE (UNTREATED).
5. ALL DIMENSIONS ARE IN MILLIMETRES UNLESS OTHERWISE NOTED.

The City of BARRIE STANDARD DETAIL | CONIFEROUS TREE PLANTING DETAIL | REV No. 4 | DATE: JUNE 2015 | SCALE: N.T.S. | BSD-1312 FORMERLY BSD-30 | APPROVED DATE June 11/15 DIRECTOR OF ENGINEERING

3 / L-2 CONIFEROUS TREE PLANTING

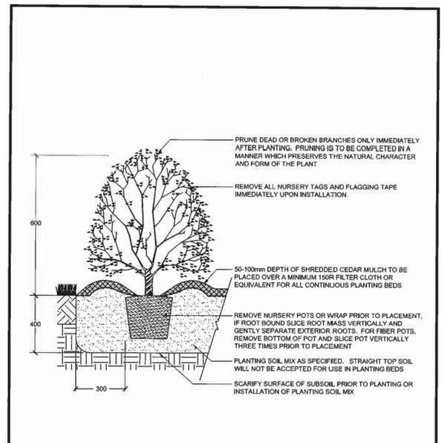

1. PLANTING METHOD ILLUSTRATED APPLIES TO CONTAINER / POTTED MATERIAL ONLY.
2. PLANTING DETAIL DOES NOT SPECIFICALLY RELATE TO ANY PARTICULAR SPECIES AND SHALL BE APPLIED TO BOTH DECIDUOUS AND CONIFEROUS POTTED MATERIAL.
3. SET SHRUBS 50mm HIGHER THAN GRADE TO ALLOW FOR SETTLEMENT.
4. ALL SHRUB PLANTING IS TO OCCUR IN CONTINUOUS MULCHED PLANTING BEDS WITH WEED CONTROL FILTER FABRIC.
5. DO NOT COVER THE BASE OF SHRUB WITH MULCH.
6. ALL SOIL SHALL BE ADEQUATELY COMPACTED TO PREVENT AIR POCKETS AND SETTLEMENT.
5. ALL DIMENSIONS ARE IN MILLIMETRES UNLESS OTHERWISE NOTED.

The City of BARRIE STANDARD DETAIL | CONTAINER GROWN SHRUB PLANTING DETAIL | REV No. 4 | DATE: JUNE 2015 | SCALE: N.T.S. | BSD-1314 FORMERLY BSD-31 | APPROVED DATE June 11/15 DIRECTOR OF ENGINEERING

4 / L-2 SHRUB PLANTING

OSC SIMCOE COUNTY NATIVE SEED MIX

APPLICATION RATE 20 KG/HA

BOTANNICAL NAME	COMMON NAME	% OF MIX
ELYMUS CANADENSIS	CANADA WILD RYE	20%
SORHASTRUM NUTANS	INDIANGRASS	20%
SPOROBILLUS CRYPTANDRUS	SAND DROPSEED	20%
SCHIZACHYRIUM SCOPARIUM	LITTLE BLUESTEM	15%
RUDBECKIA HIRTA	BLACK EYED SUSAN	12%
ASCLEPIAS SYRIACA	COMMON MILKWEED	5%
SOLIDAGO CANADENSIS	CANADA GOLDENROD	4%
ASTER NOVAE-ANGLIAE	NEW ENGLAND ASTER	2%
MONARDA FISTULOSA	WILD BERGAMOT	1%
ASTER LAEVIS	SMOOTH BLUE ASTER	1%

SEEDING SPECIFICATIONS

FERTILIZER SHALL BE COMBINED WITH SEED MIX AT THE FOLLOWING RATE PER HECTARE:

5-20-20 ANALYSIS	450kg
32-0-0 ANALYSIS	115kg
(SULPHUR COATED AREA) 0-46-0 ANALYSIS	225kg

HYDRAULIC MULCH TO BE APPROVED BY THE LANDSCAPE ARCHITECT AND SHALL BE APPLIED AT THE RATE OF 2100kg PER HECTARE.

THE CONTRACTOR SHALL NOT CARRY OUT THE WORK UNDER ADVERSE WEATHER CONDITIONS SUCH AS HIGH WIND, FROZEN GROUND OR GROUND COVERED WITH SNOW, ICE OR STANDING WATER.

A SOIL TEST SHOULD BE PERFORMED BY A COMPETENT CONTRACTOR TO VERIFY MIXTURE AND PERCENTAGES REQUIRED.

PREPARATION:
GRADE SUB-GRADE, ELIMINATE UNEVEN AREAS AND LOW SPOTS, ENSURE POSITIVE DRAINAGE. REMOVE DEBRIS, ROOTS, BRANCHES, STONES IN EXCESS OF 50MM DIAMETER AND OTHER DELETERIOUS MATERIALS. REMOVE SUBSOIL THAT HAS BEEN CONTAMINATED WITH OIL, GASOLINE OR CALCIUM CHLORIDE, DISPOSE OF REMOVED MATERIAL AS DIRECTED BY LANDSCAPE ARCHITECT.

GRADE SUB-GRADE FOR SEEDING TO A UNIFORM SURFACE AND REMOVE VEGETATION WHICH MAY INTERFERE WITH SEEDING OPERATIONS. LOOSEN SOIL TO DEPTH OF 25MM MINIMUM AND REMOVE STONES AND FOREIGN MATERIAL WHICH PROTRUDE MORE THAN 75MM ABOVE THE SURFACE.

CONTRACTOR TO SUPPLY AND INSTALL 100mm (4") LAYER OF TOPSOIL OVER THE AREA TO BE SEEDED PRIOR TO SEEDING. SEEDING SHALL OCCUR IMMEDIATELY FOLLOWING INSTALLATION OF TOPSOIL. IF A DELAY OCCURS, THE CONTRACTOR IS RESPONSIBLE FOR REMOVING ALL WEEDS PRIOR TO SEEDING, SHOULD THEY FAIL TO EXECUTE SEEDING IN A TIMELY MANNER.

MAINTENANCE:
SEEDED AREAS TO BE MAINTAINED BY CONTRACTOR ENSURING ADEQUATE WATER, FERTILIZER, ANNUAL MOWINGS (2-3 YEAR ONE, AND 1-2 YEAR TWO), MAINTENANCE AND REPAIR UNTIL SEEDED AREAS ARE PROPERLY ESTABLISHED. AREAS SEEDED IN FALL WILL BE ACCEPTED IN FOLLOWING SPRING, ONE MONTH AFTER START OF GROWING SEASON PROVIDED ACCEPTANCE CONDITIONS ARE FULFILLED.

NOTES

- ALL SEED MIXTURES TO BE SUPPLIED BY ONTARIO SEED COMPANY LTD. (OR APPROVED EQUAL).
- MIX IS DESIGNED TO BE APPLIED AS PER MANUFACTURERS SPECIFICATIONS.
- SEED ANNUAL RYEGRASS AS A NURSE CROP AND TO ENHANCE EROSION CONTROL AT 12 kg per hectare.
- PREPARE ALL DISTRUBED AREAS TO BE SEEDED WITH MIN 100MM OF SOIL/COMPOST MIXTURE.

5 / L-2 HYDROSEEDING

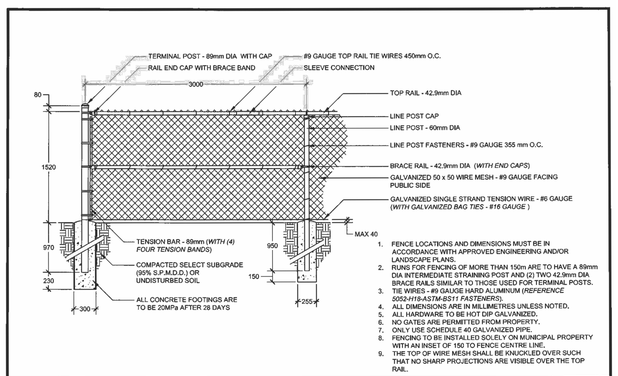

1. FENCE LOCATIONS AND DIMENSIONS MUST BE IN ACCORDANCE WITH APPROVED ENGINEERING AND/OR LANDSCAPE PLANS.
2. RUNS FOR FENCING OF MORE THAN 150m ARE TO HAVE A 89mm DIA INTERMEDIATE STRAINING POST AND (2) TWO 42.9mm DIA BRACE RAILS SIMILAR TO THOSE USED FOR TERMINAL POSTS.
3. TIE WIRES - #9 GAUGE HARD ALUMINUM (REFERENCE 5052-H18-ASTM-B211 FASTENERS).
4. ALL DIMENSIONS ARE IN MILLIMETRES UNLESS NOTED.
5. ALL HARDWARE TO BE HOT DIP GALVANIZED.
6. NO GATES ARE PERMITTED FROM PROPERTY.
7. ONLY USE SCHEDULE 40 GALVANIZED PIPE.
8. FENCING TO BE INSTALLED SOLELY ON MUNICIPAL PROPERTY WITH AN INSET OF 150 TO FENCE CENTRE LINE.
9. THE TOP OF WIRE MESH SHALL BE KNUCKLED OVER SUCH THAT NO SHARP PROJECTIONS ARE VISIBLE OVER THE TOP RAIL.

The City of BARRIE STANDARD DETAIL | 1.52m CHAIN LINK PARK FENCING | REV No. 1 | DATE: JUNE 2015 | SCALE: N.T.S. | BSD-1210 FORMERLY BSD-21 | APPROVED DATE June 11/15 DIRECTOR OF ENGINEERING

6 / L-2 1.5M CHAIN LINK FENCING

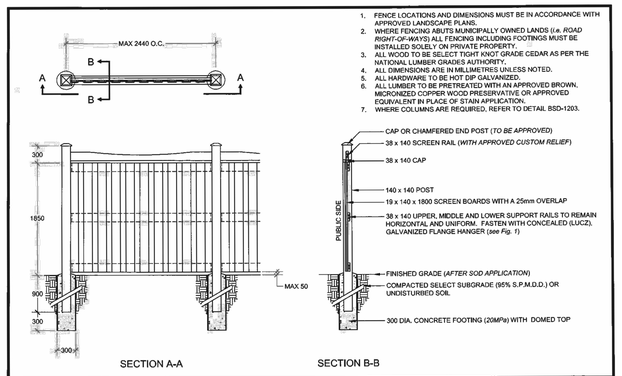

SECTION A-A SECTION B-B

1. FENCE LOCATIONS AND DIMENSIONS MUST BE IN ACCORDANCE WITH APPROVED LANDSCAPE PLANS.
2. WHERE FENCING ABUTS MUNICIPALLY OWNED LANDS (i.e. ROAD RIGHT-OF-WAYS) ALL FENCING INCLUDING FOOTINGS MUST BE INSTALLED SOLELY ON PRIVATE PROPERTY.
3. ALL WOOD TO BE SELECT TIGHT KNOT GRADE CEDAR AS PER THE NATIONAL LUMBER GRADES AUTHORITY.
4. ALL DIMENSIONS ARE IN MILLIMETRES UNLESS NOTED.
5. ALL HARDWARE TO BE HOT DIP GALVANIZED.
6. ALL LUMBER TO BE PRETREATED WITH AN APPROVED BROWN, MICRONIZED COPPER WOOD PRESERVATIVE OR APPROVED EQUIVALENT IN PLACE OF STAIN APPLICATION.
7. WHERE COLUMNS ARE REQUIRED, REFER TO DETAIL BSD-1203.

The City of BARRIE STANDARD DETAIL | RESIDENTIAL TO RESIDENTIAL REVERSE LOT FRONTAGE FENCE | REV No. 1 | DATE: JUNE 2015 | SCALE: N.T.S. | BSD-1204 FORMERLY BSD-19B | APPROVED DATE June 10/15 DIRECTOR OF ENGINEERING

7 / L-2 1.85M RESIDENTIAL WOOD PRIVACY FENCE

LEGEND

CITY STAMP

GENERAL NOTES

1. Do not scale the drawings. All dimensions are in millimetres unless noted otherwise.
2. This drawing is to be read in conjunction with the overall master plan and engineering drawings prepared by the project engineer and site plans prepared by the project architect.
3. The contractor shall check and verify all existing and proposed grading and conditions on the project and immediately report any discrepancies to the consultant before proceeding with any work.
4. The contractor is to be aware of all existing and proposed services and utilities. The contractor is responsible for having all underground services and utility lines staked by each agency having jurisdiction prior to commencing work.
5. This drawing is to be used for development approval only. For layout of all work refer to construction drawings.
6. Plant quantities indicated on the plan supercede the quantities from the plant list (report any discrepancies to the landscape architect).
7. Do not leave any holes open overnight.
8. Keep area outside construction zone clean and useable by others at all times. Contractor shall throughly clean areas surrounding the construction zone at the end of each work day.
9. Contractor to make good any and all damages outside of the development area that may occur as a result of construction at no extra cost.
10. This drawing is Copyright MHBC 2021

REVISION NO.	DATE	ISSUED / REVISION	BY
1.	FEBRUARY 11, 2022	ISSUED FOR SPA	CC

MHBC PLANNING URBAN DESIGN & LANDSCAPE ARCHITECTURE
230-7050 WESTON ROAD WOODBRIDGE, ON. L4L 8G7 | P: 905 761 5588 F: 905 761 5589 | WWW.MHBCPLAN.COM

STAMP: ONTARIO ASSOCIATION OF LANDSCAPE ARCHITECTS — OALA — MEMBER

DATE: JANUARY 2022
DRAWN BY: CC
CHECKED BY: N.M.
PLAN SCALE:
FILE NO.: 1219J
CITY PROJECT NUMBER: D28-095-2021
CLIENT NAME: LOON AVENUE LANDS OP INC.

All drawings and specifications are instruments of service and will remain the property of MHBC Planning and must be returned at the completion of the work. This drawing shall not be used for construction purposes unless the drawings are marked 'Issued for Construction' and the professional seal is signed and dated by the landscape architect.

PROJECT: LOON LANDS, BARRIE, ON

LEGAL DESCRIPTION: PT S 1/2 LT 11 CON 12 INNISFIL PT 1 51R4733 EXCEPT PT 1 EXPRO. PL SC944619; CITY OF BARRIE

FILE NAME: LANDSCAPE DETAILS

DWG NO.: L2

SOURCE: N:\1219\J - Loon Lands\2. Drawings\4. Landscape\2. 02-01-2022\1219J - Landscape- 02-01-2022.dwg